-
-
-
-
-
-
-

026

-
-

BST	6	Power supply for the high-side power MOSFET gate driver. Must connect a 0.1uF or greater ceramic capacitor between BST pin and SW node.

(1)
(2)

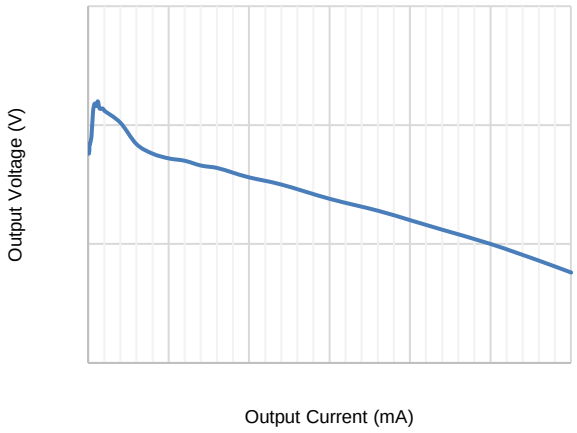
Output Voltage (V)
Output Current (mA)

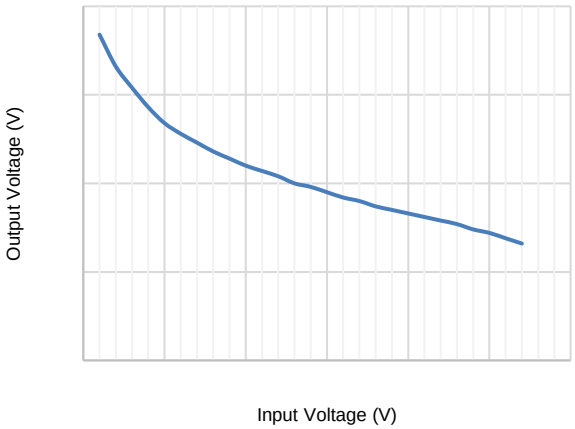
Output Voltage (V)
Input Voltage (V)

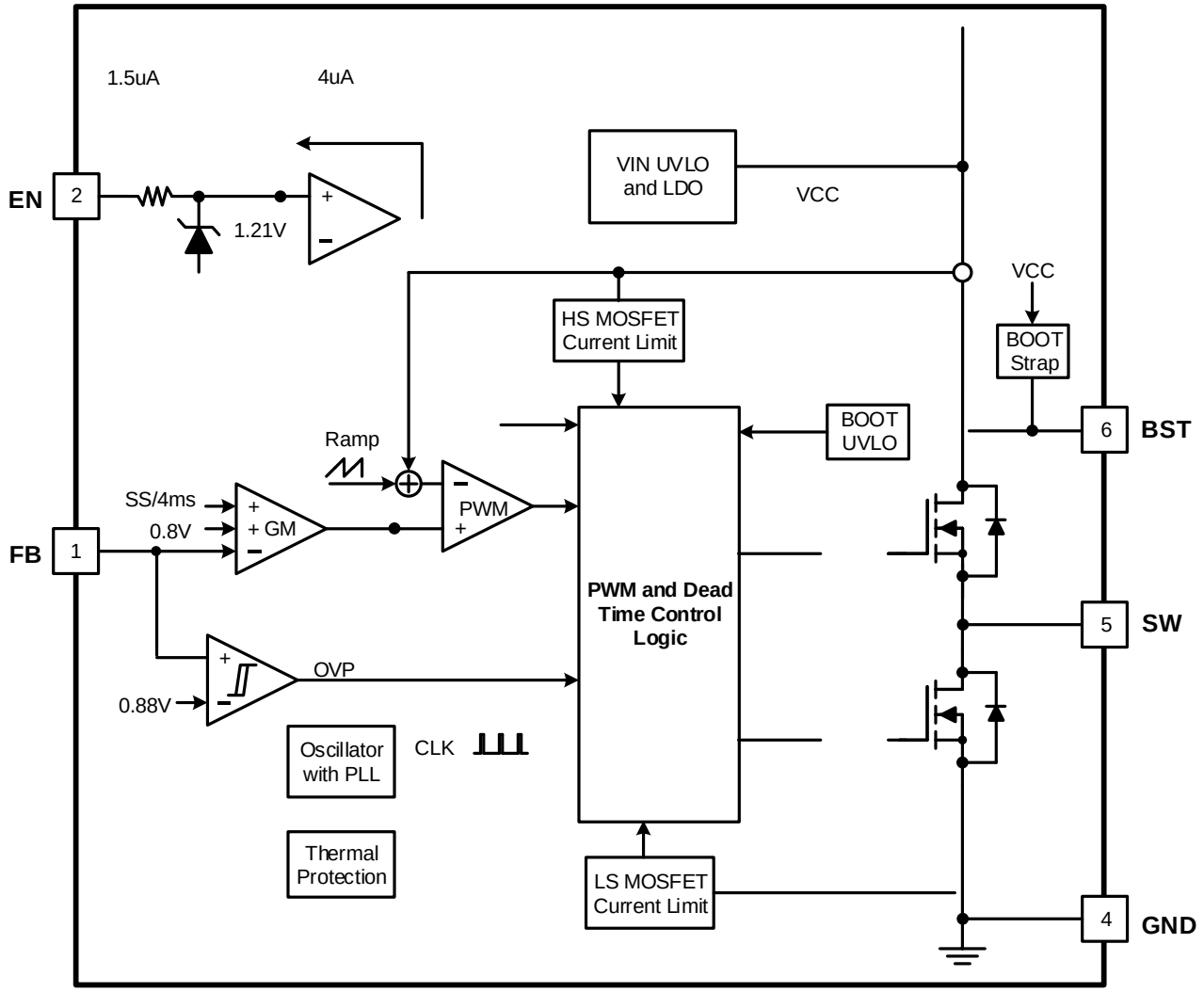
1.5uA
4uA
EN
2
1.21V
VIN UVLO
and LDO
VCC
VCC
HS MOSFET
Current Limit
BOOT
Strap
BOOT
UVLO
6
BST
Ramp
SS/4ms
0.8V
+
+ GM
PWM
FB
1
PWM and Dead
Time Control
Logic
5
SW
OVP
0.88V
Oscillator
with PLL
CLK
Thermal
Protection
LS MOSFET
Current Limit
4
GND

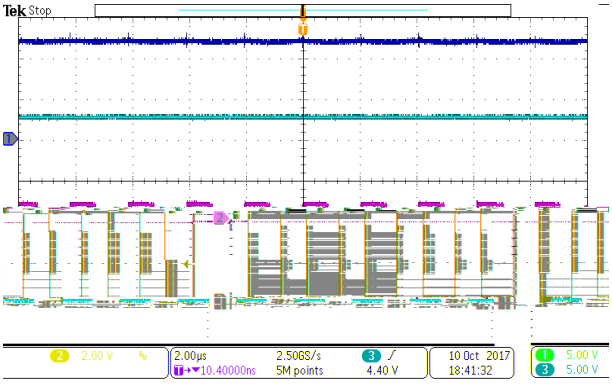
Tek Stop
2 2.00 V
2.00µs
10.40000ns
2.50GS/s
5M points
3
4.40 V
10 Oct 2017
18:41:32
1 5.00 V
3 5.00 V

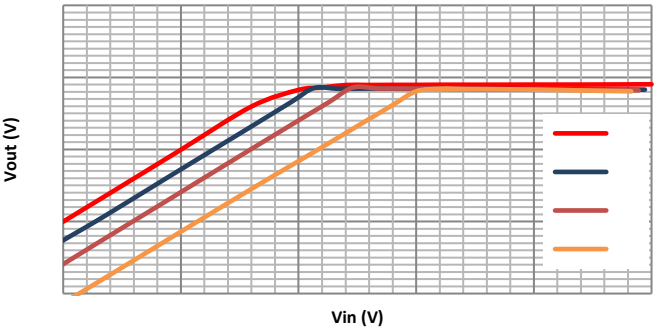
Vout (V)
Vin (V)

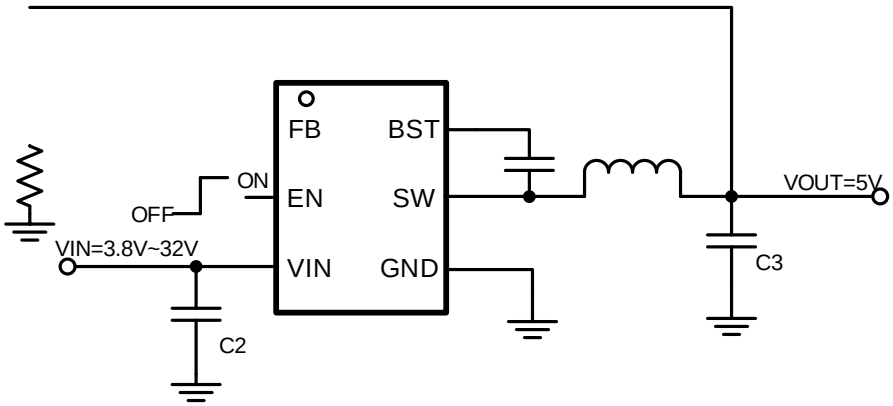

Design Parameters	Example Value
Input Voltage	24V
Output Voltage	5V
Output Current	3A
Output voltage ripple (peak to peak)	±0.3V
Switching Frequency	400kHz

(3)

-
-
-

(4)

-

(5)

(6)

-
-
-

(7)

(8)

-
-
-

(10)

(11)

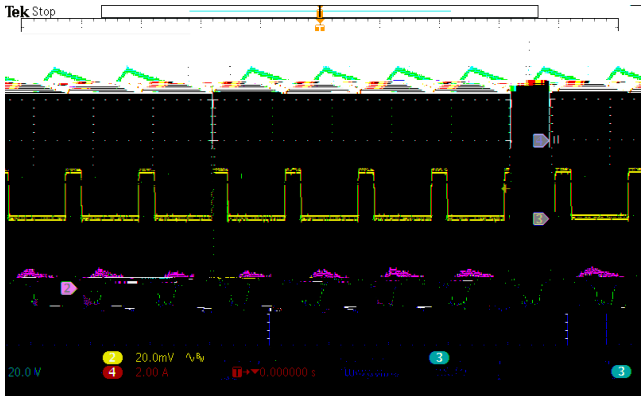

Figure 14. SW node waveform and Output Ripple
VIN=24V, IOUT=3A

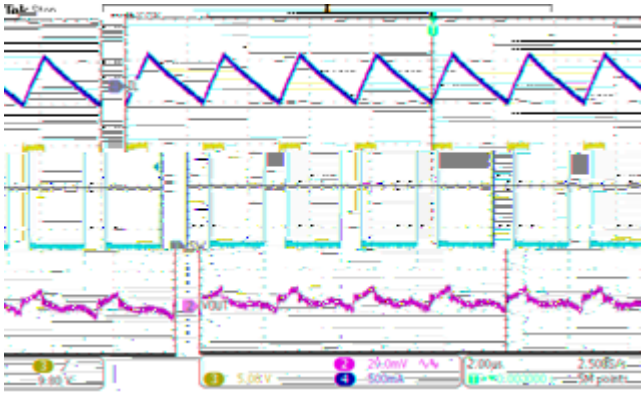

Figure 15. SW node Waveform and Output Ripple
VIN=24V, IOUT=10mA

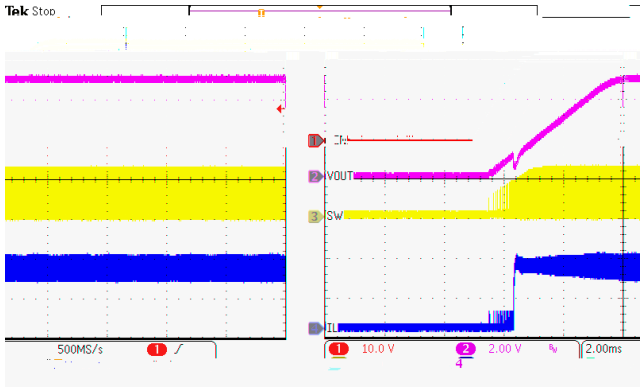

Figure 16. Power Up
VIN=24V, VOUT=5V, IOUT=3A

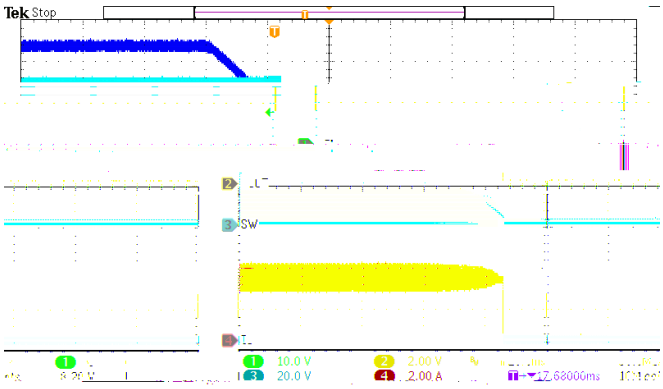

Figure 17. Power Down
VIN=24V, VOUT=5V, IOUT=3A

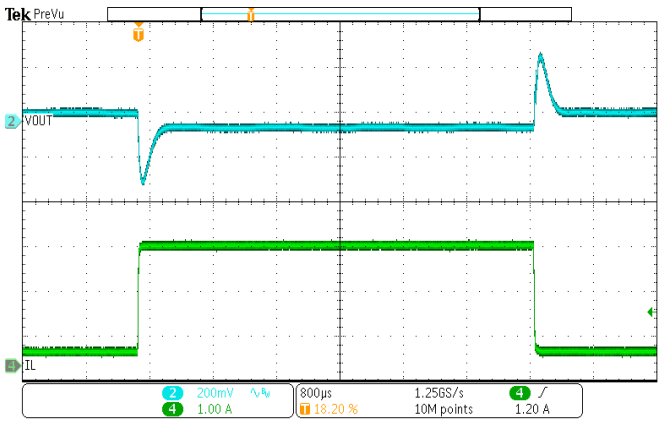

Figure 18. Load Transient
VOUT=5V, IOUT=0.3A to 2.7A, SR=250mA/us

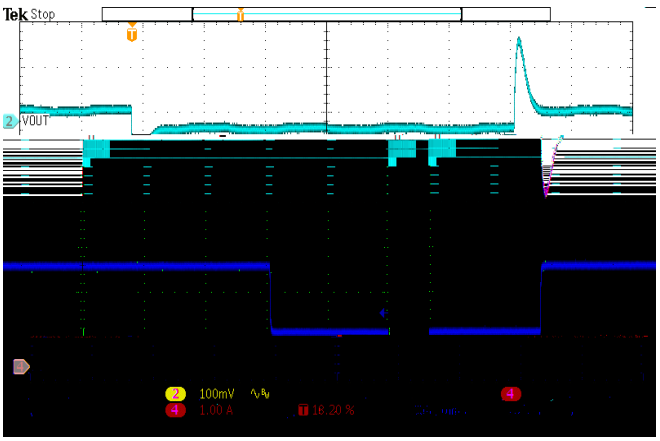

Figure 19. Load Transient
VOUT=5V, IOUT=0.75A to 2.25 A, SR=250mA/us

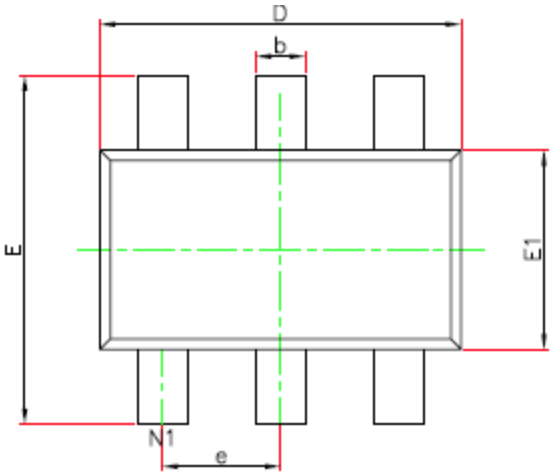

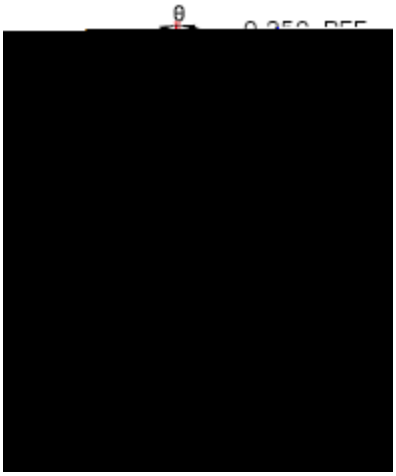

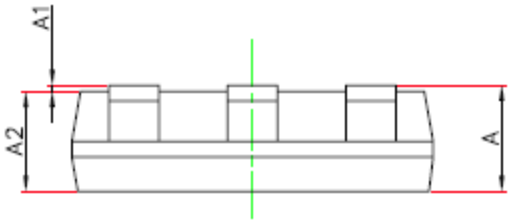

SYMBOL	Unit: Millimeter		
	MIN	TYP	MAX
A	-------		1.10
A1	0.000		0.10
A2	0.70		1.00
D	2.85		2.95
E	2.65		2.95
E1	1.55		1.65
b	0.30		0.50
c	0.08		0.20
e	0.95(BSC)		
L	0.30		0.60
	0		8

1.
2.
3.
4.
5.
6.

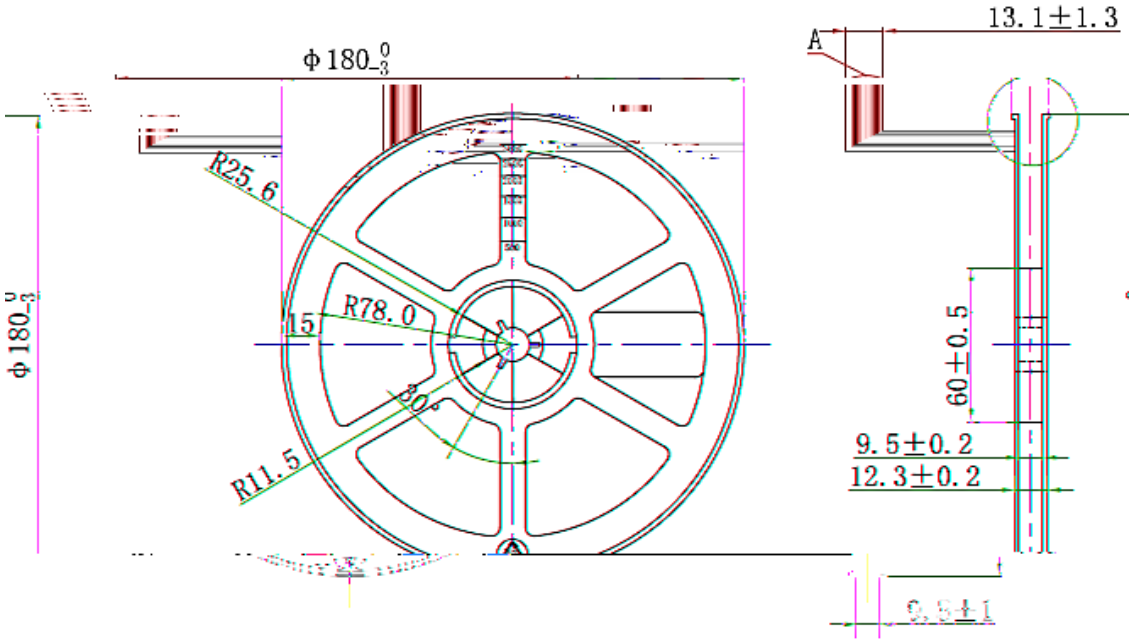
Φ180
13.1±1.3
A
R25.6
R78.0
15
30°
R11.5
Φ180
60±0.5
9.5±0.2
12.3±0.2
0.5±1

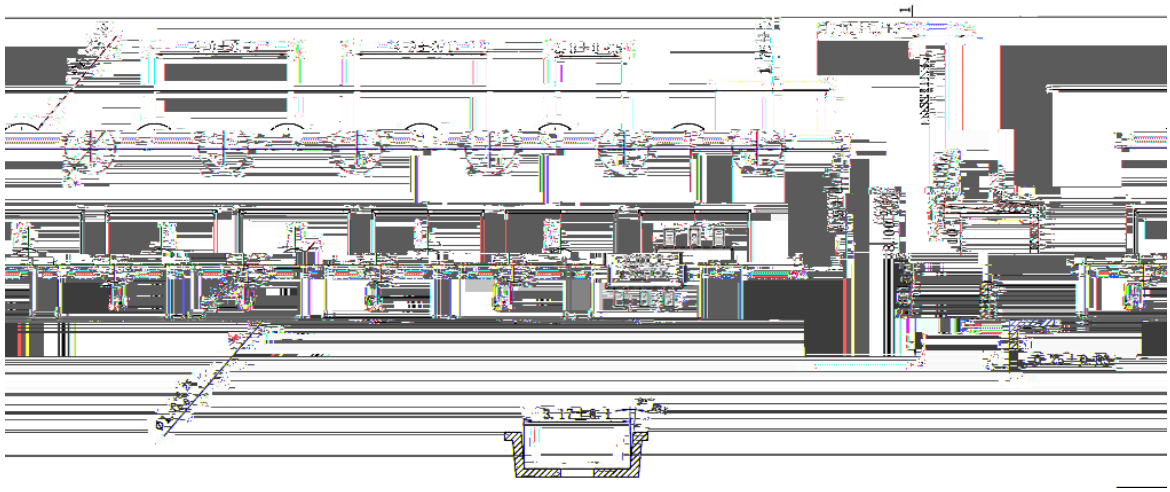

PN	DESCRIPTION	COMMENTS
SCT2320 **SCT2321**	3.8V-32V Vin, 2A Synchronous Step-down DCDC Converter with EMI Qq5(n)-9/0ḷ53 Synch2.5ḷ53	