3.8V-40V Vin, 3.5A, High Efficiency Synchronous Step-down DCDC Converter with Programmable Frequency

ED ST DR

CDRB HDSHNM

-
-
-
-
-
-
-
-
-
-
-
-
-
-
-
-

OOKHB SHNMR

-
-
-

SXOHB K OOKHB SHNM

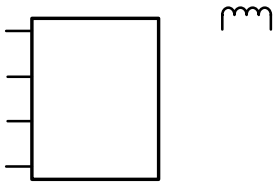

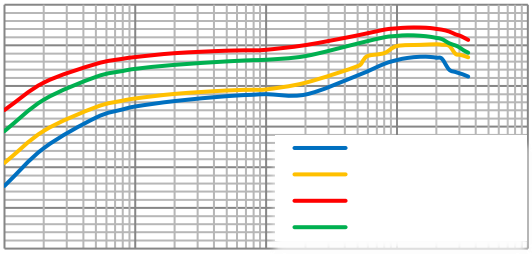

DUHRHNMGHRSN X

CDUHBDN CD HMEN L SHNM

ARNKTSDL HL TL SHMFR

OHMBNMEHFT SHNM

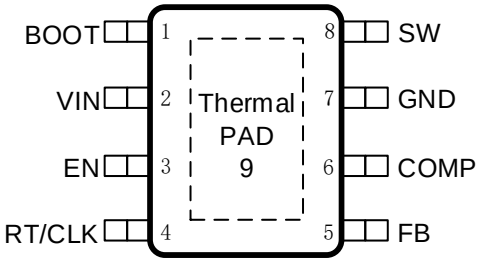

(1)

(2)

OHMETMBSHNMR

DBNL L DMC DC NOD S HMF BNMC HS HNMR

DKDBS HB K BG BS D HRS HBR

SXOHB

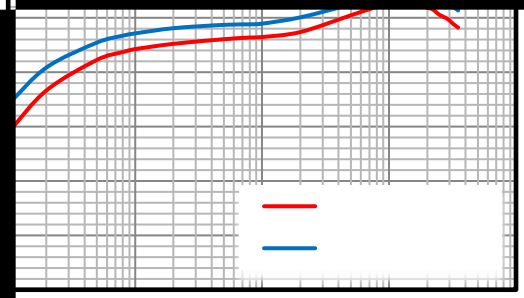

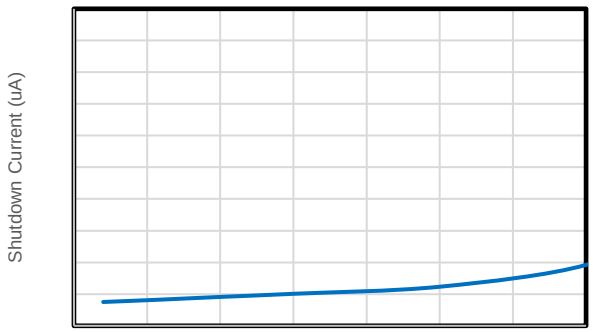
Shutdown Current (uA)

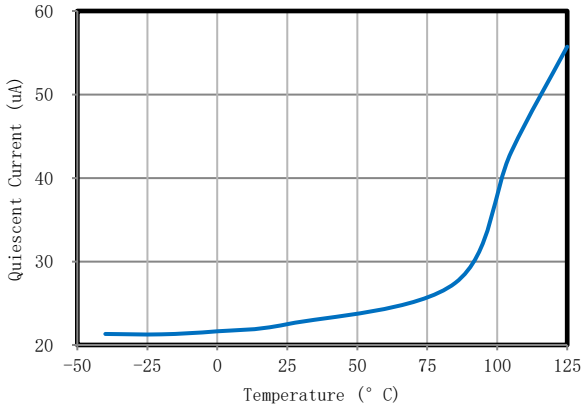
60
50
40
30
20
Quiescent Current (uA)
-50
-25
0
25
50
75
100
125
Temperature (° C)

.

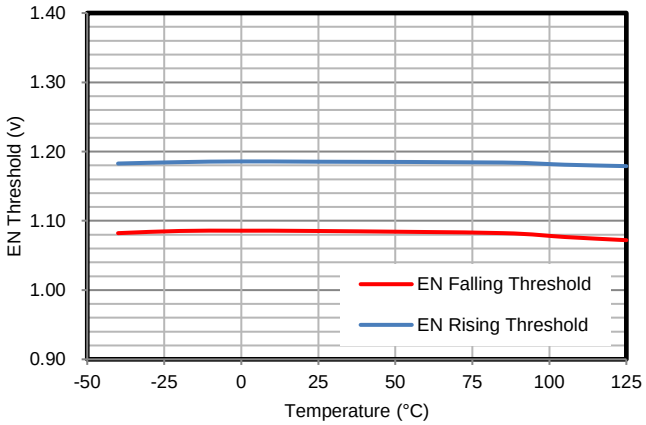
1.40
1.30
1.20
1.10
1.00
0.90
EN Threshold (v)
EN Falling Threshold
EN Rising Threshold
-50
-25
0
25
50
75
100
125
Temperature (°C)

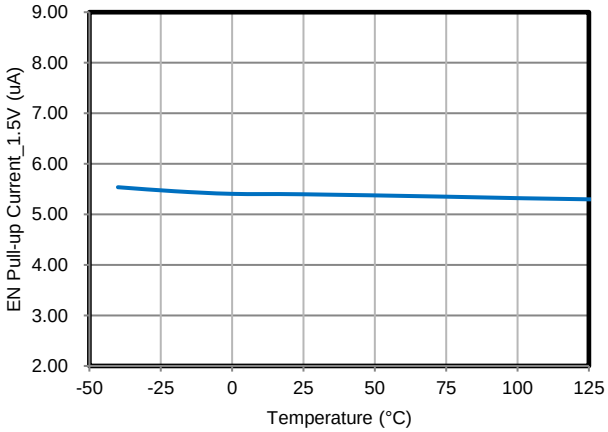
9.00
8.00
7.00
6.00
5.00
4.00
3.00
2.00
EN Pull-up Current_1.5V (uA)
-50
-25
0
25
50
75
100
125
Temperature (°C)

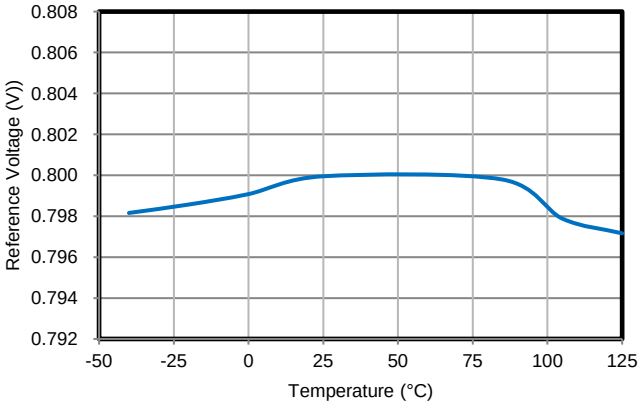
0.808
0.806
0.804
0.802
0.800
0.798
0.796
0.794
0.792
Reference Voltage (V))
-50
-25
0
25
50
75
100
125
Temperature (°C)

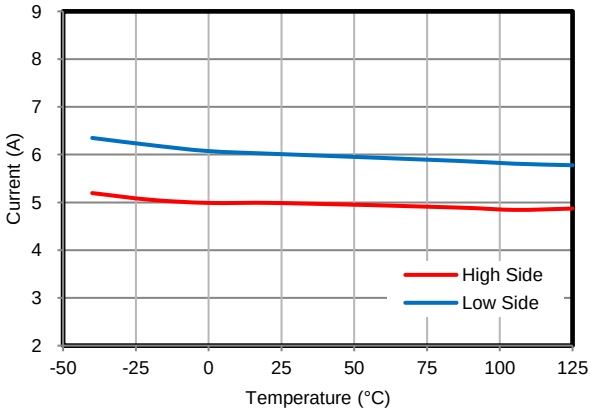
9
8
7
6
5
4
3
2
Current (A)
High Side
Low Side
-50
-25
0
25
50
75
100
125
Temperature (°C)

ETMBSHNM KAKNB CHF L

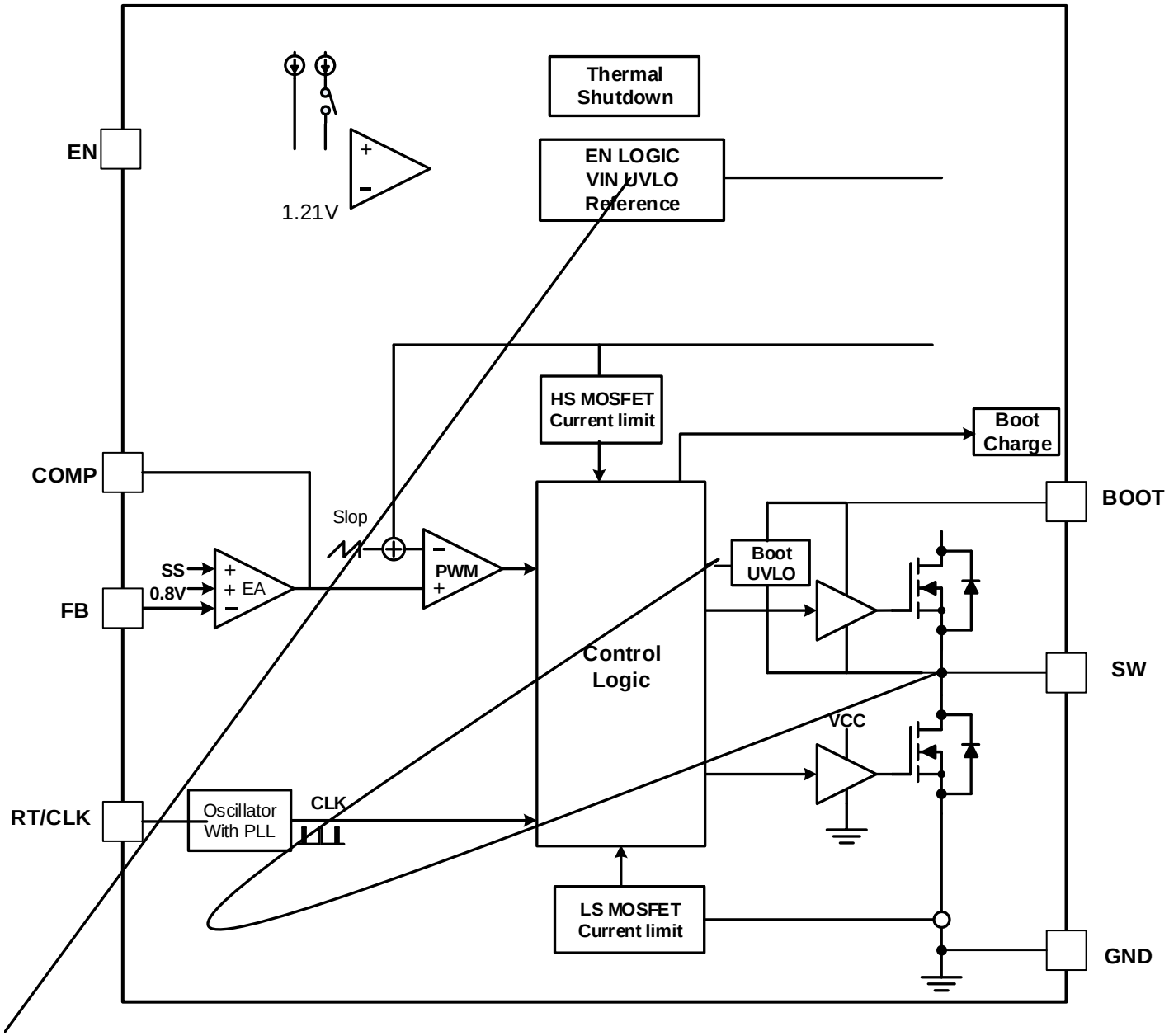

OOKHB SHNMHMEN L SHNM

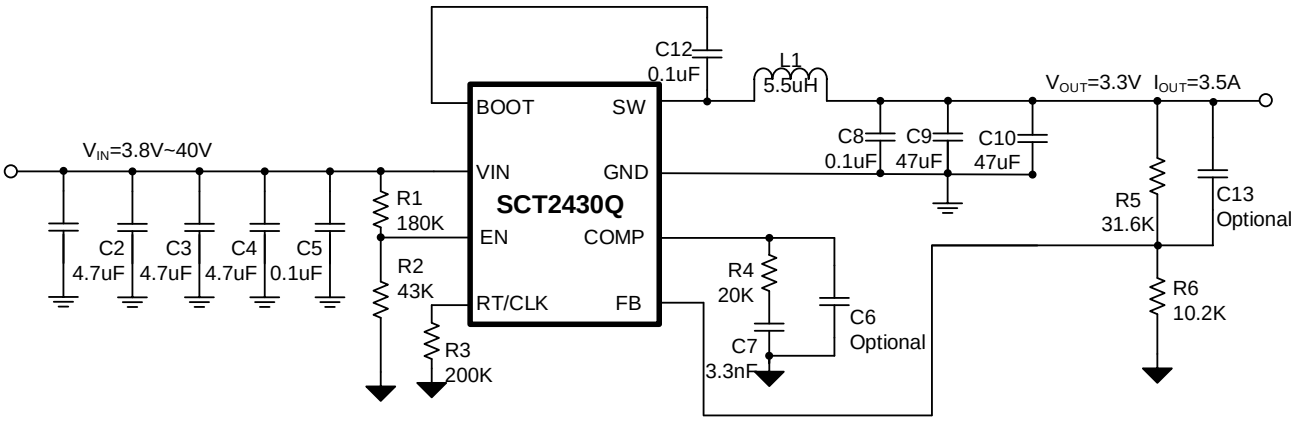

•

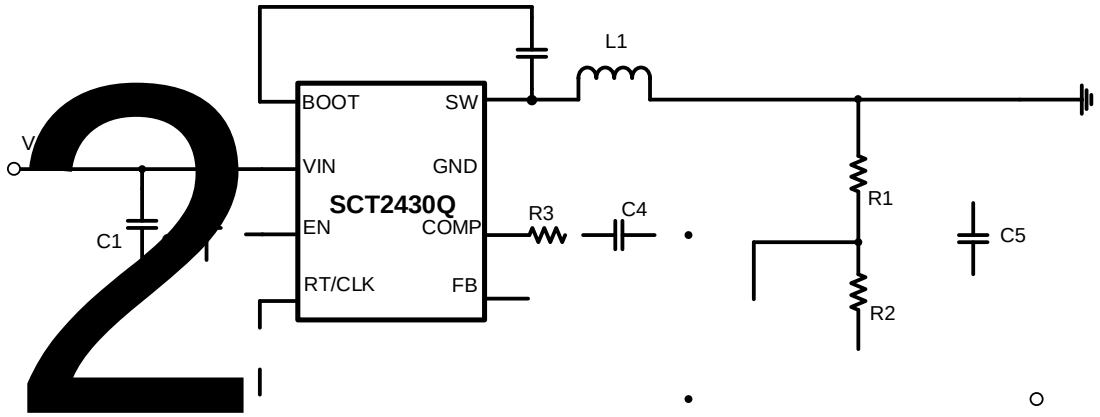
L1
BOOT
SW
VIN
GND
SCT2430Q
EN
COMP
RT/CLK
FB
C1
R3
C4
R1
R2
C5

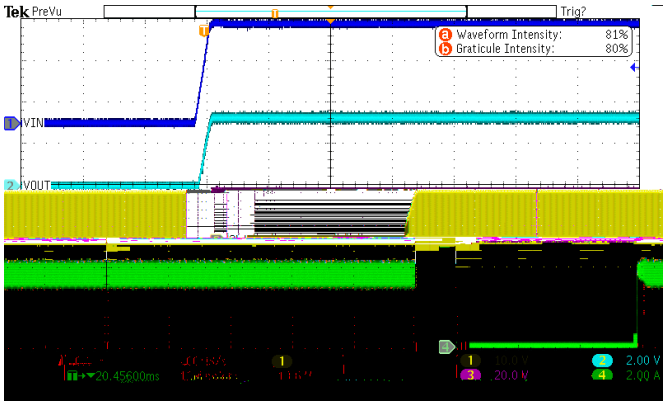
Tek PreVu
Trig?
Waveform Intensity: 81%
Graticule Intensity: 80%
VIN
VOUT
2.00 V
2.00 A

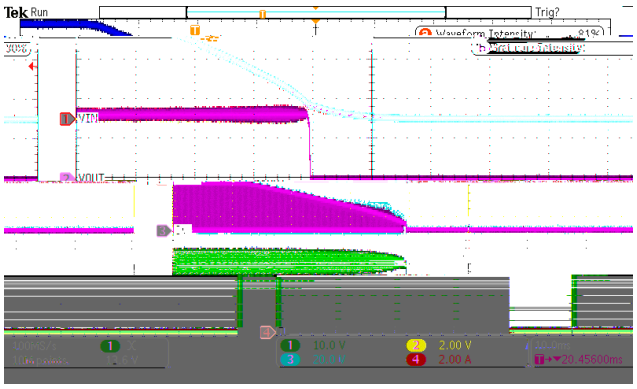
Tek Run
Trig?
VIN
VOUT
10.0 V
2.00 V
2.00 A

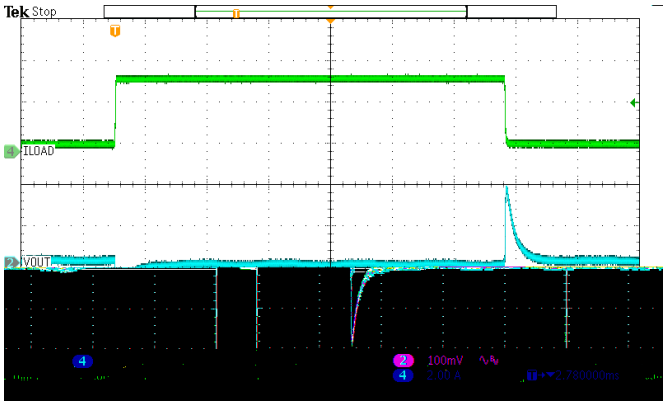
Tek Stop
ILOAD
VOUT
100mV
2.00 A

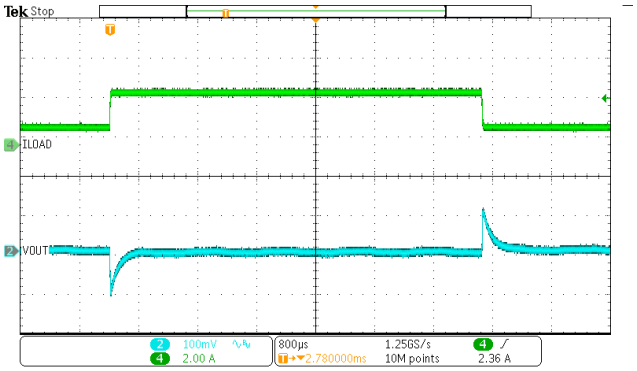
Tek Stop
ILOAD
VOUT
100mV
2.00 A
300µs
1.25GS/s
10M points
2.36 A

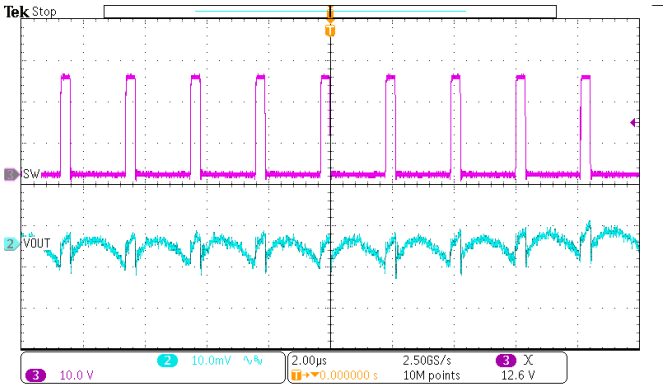
Tek Stop
SW
VOUT
10.0mV
10.0 V
2.00µs
2.50GS/s
10M points
12.6 V

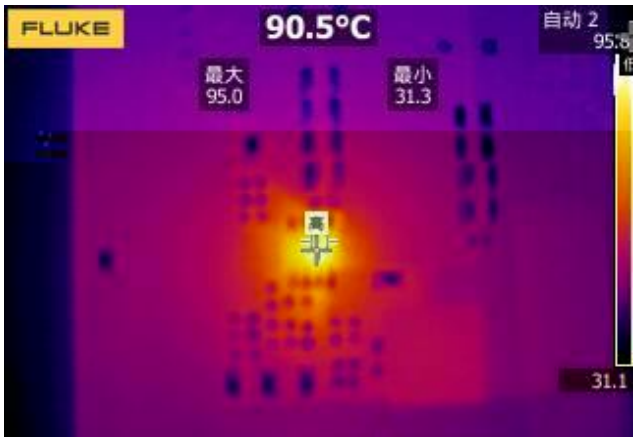
FLUKE
90.5°C
自动 2
最大
95.0
最小
31.3
31.1

1.

2.
3.

4.

5.

6.

7.

8.
9.

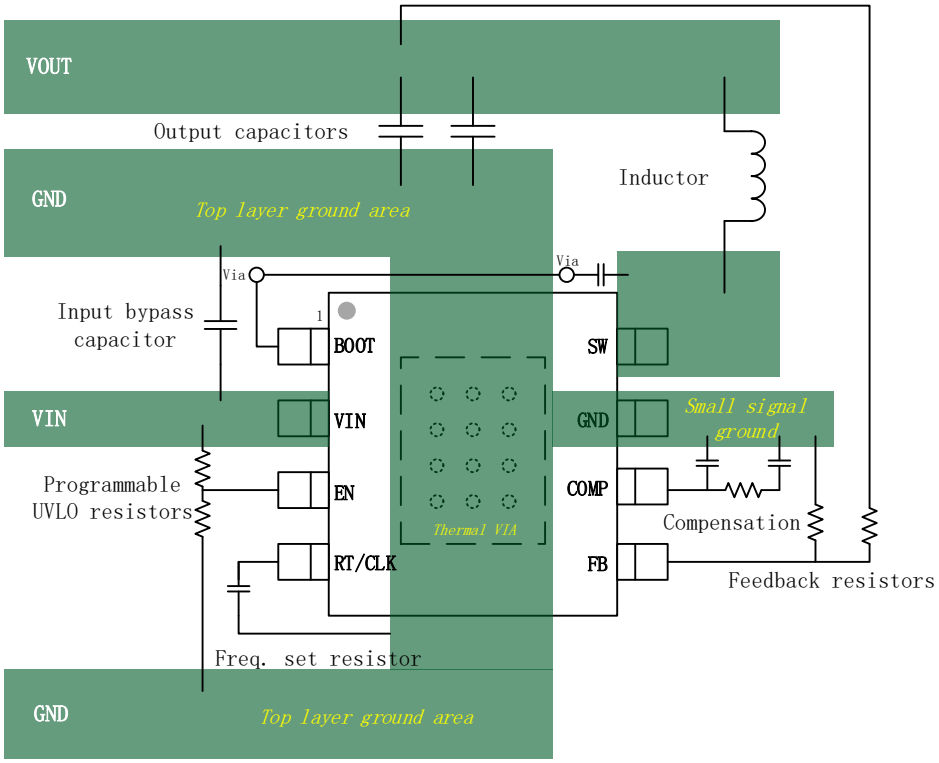
VOUT
Output capacitors
Inductor
GND
Top layer ground area
Via
Via
Input bypass
capacitor
1
BOOT
SW
VIN
VIN
GND
Small signal
ground
Programmable
UVLO resistors
EN
COMP
Thermal VIA
Compensation
RT/CLK
FB
Feedback resistors
Freq. set resistor
GND
Top layer ground area

O B FDHMEN L SHNM

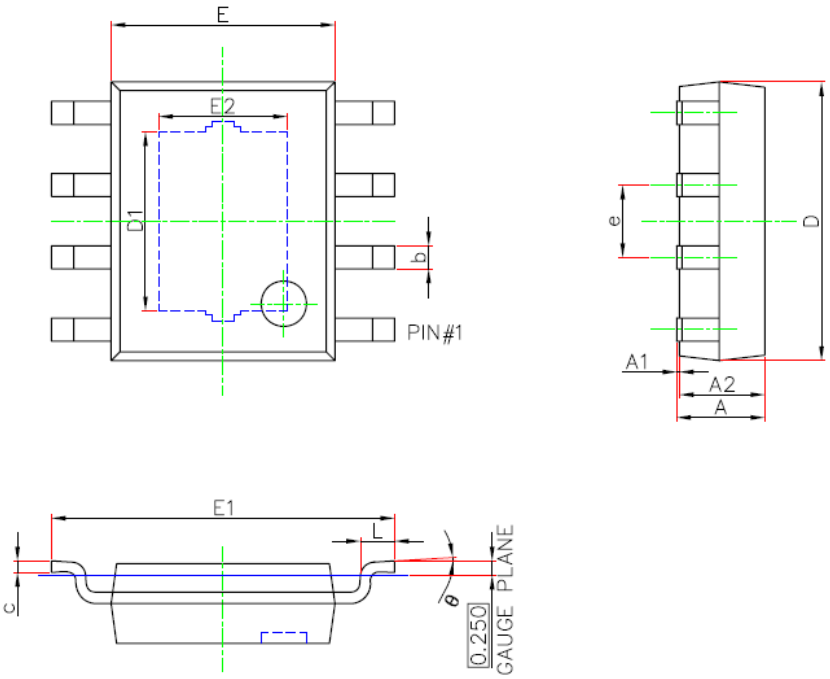

θ				

1.
2.
3.
4.
5.
6.
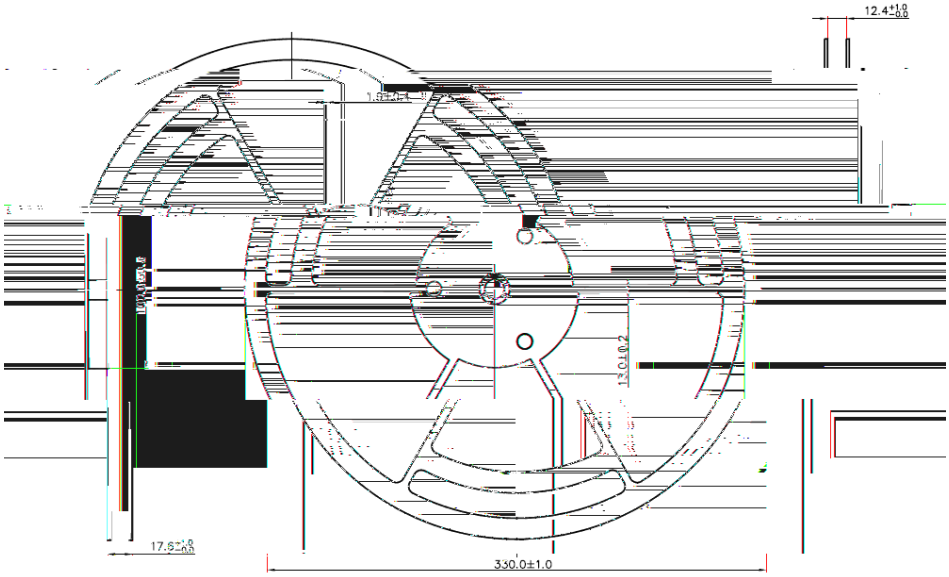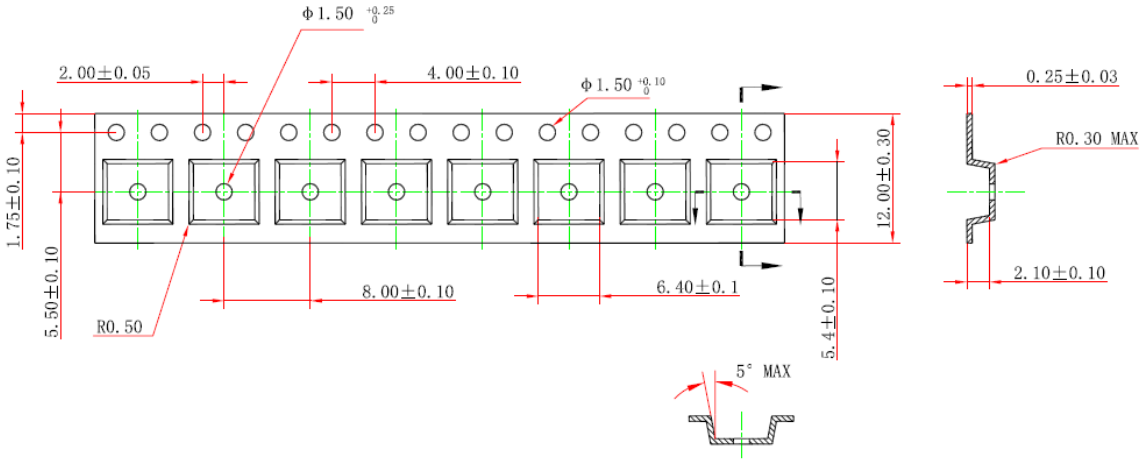
S OD MC DDKHMEN L SHNM