3.8V-30V Vin, 3A, High Efficiency Synchronous Step-down DCDC Converter

FEATURES

DESCRIPTION

APPLICATIONS

TYPICAL APPLICATION

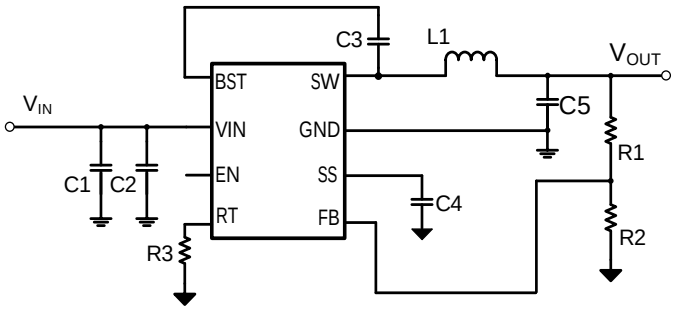

3.8V-30V, Synchronous Buck Converter
Simplified schematic diagram

RECOMMENDED OPERATING CONDITIONS

ESD RATINGS

		[redacted]		

(1)
(2)

THERMAL INFORMATION

TYPICAL CHARACTERISTICS

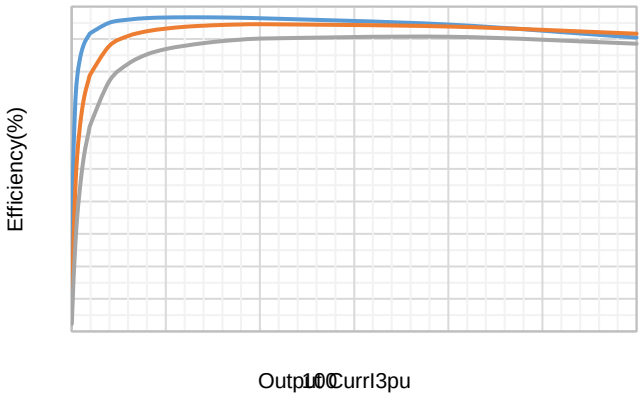

FUNCTIONAL BLOCK DIAGRAM

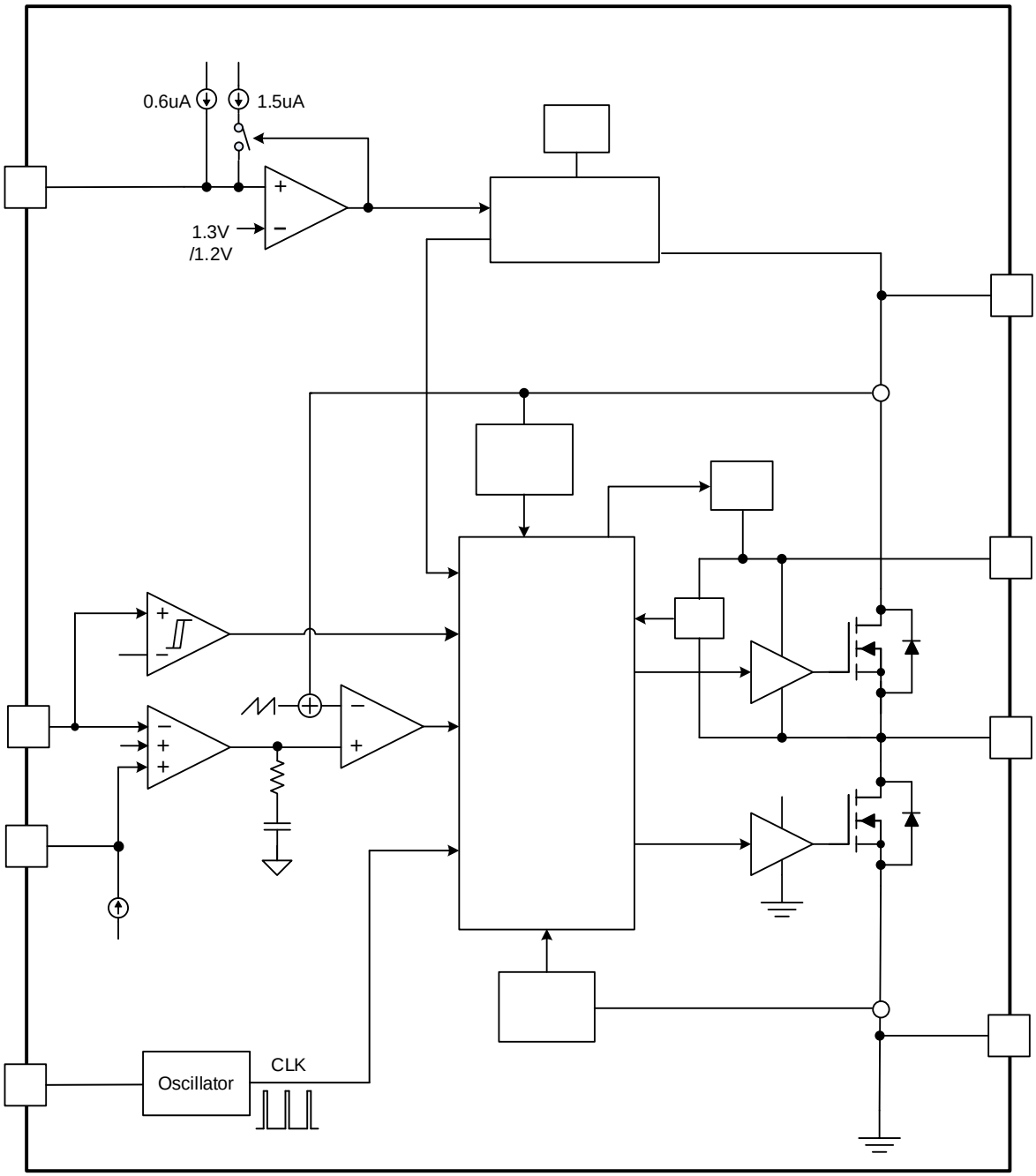

OPERATION

APPLICATION INFORMATION

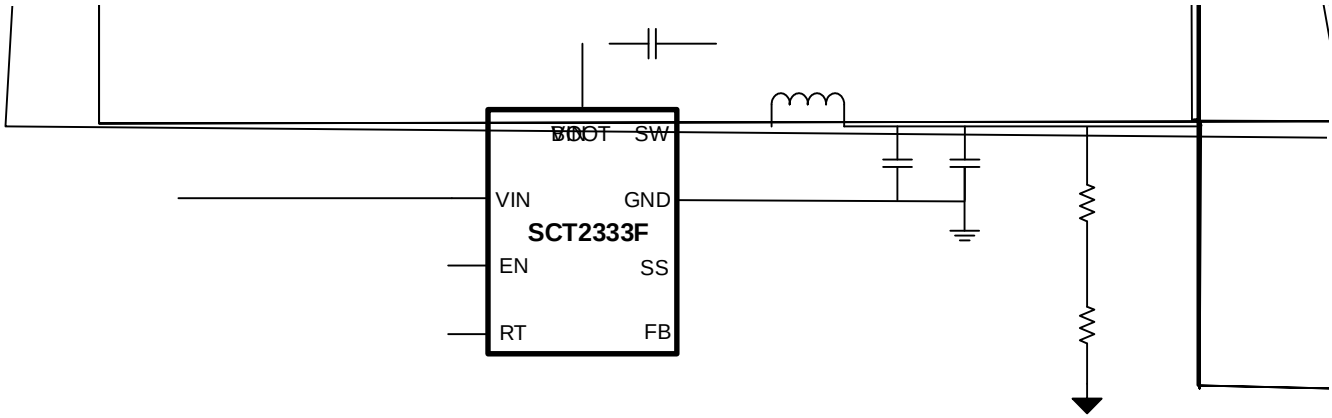

VIN

b " (	b e e ee f	ed f eb

VOUT	FREQUENCY	R1	R2	R_{RT}	L1		COUT
5V	500kHz	53.6 kΩ	10.2 kΩ	Floating	6.8 uH	Optional	44uF
12V	500kHz	143 kΩ	10.2 kΩ	Floating	15 uH	Optional	44uF
5V	1.15M						

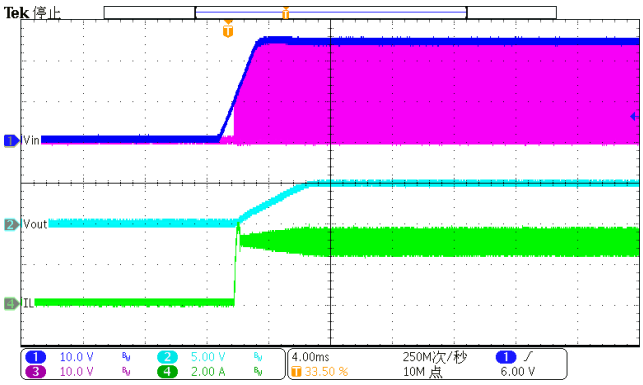
Tek 停止
Vin
Vout
IL
10.0 V
5.00 V
10.0 V
2.00 A
4.00ms
33.50 %
250M次/秒
10M 点
6.00 V

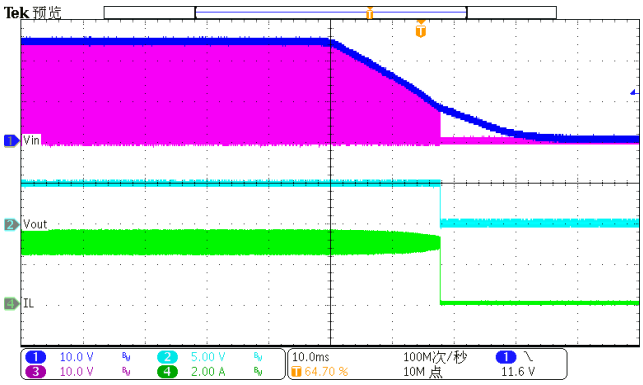
Tek 预览
Vin
Vout
IL
10.0 V
5.00 V
10.0 V
2.00 A
10.0ms
64.70 %
100M次/秒
10M 点
11.6 V

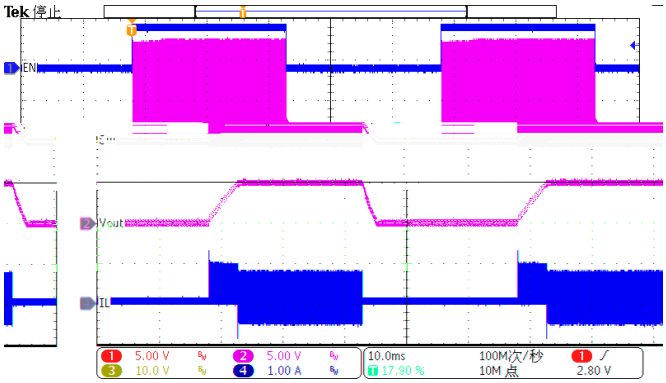
Tek 停止
EN
Vout
IL
5.00 V
5.00 V
10.0 V
1.00 A
10.0ms
17.90 %
100M次/秒
10M 点
2.80 V

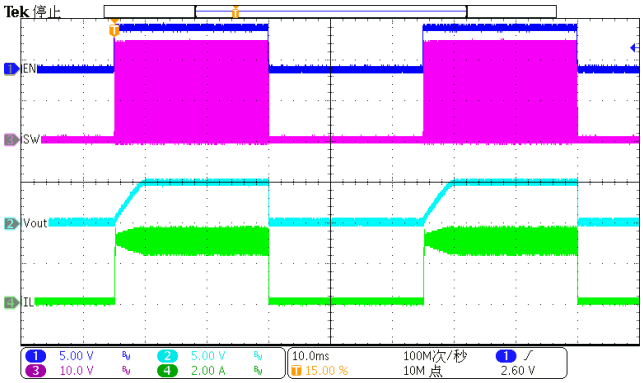
Tek 停止
EN
SW
Vout
IL
5.00 V
5.00 V
10.0 V
2.00 A
10.0ms
15.00 %
100M次/秒
10M 点
2.60 V

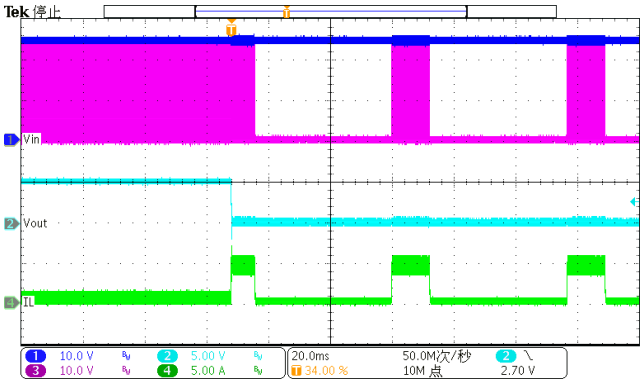
Tek 停止
Vin
Vout
IL
10.0 V
5.00 V
10.0 V
5.00 A
20.0ms
34.00 %
50.0M次/秒
10M 点
2.70 V

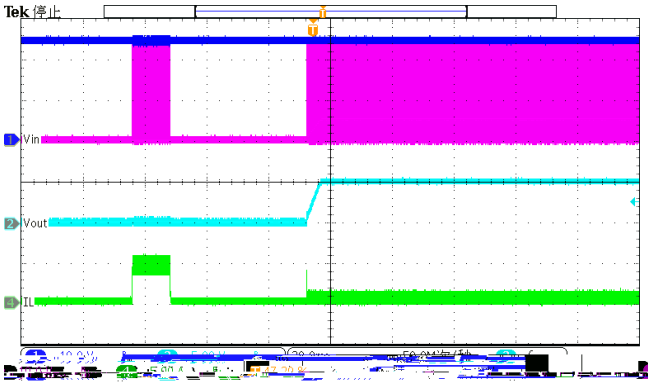
Tek 停止
Vin
Vout
IL

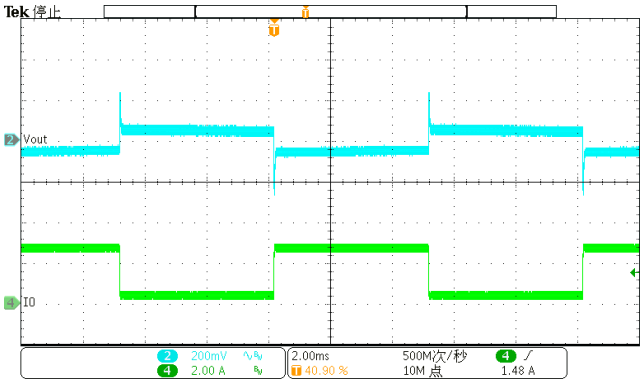
Tek 停止
Vout
IO
200mV
2.00 A
2.00ms
40.90 %
500M次/秒
10M 点
1.48 A

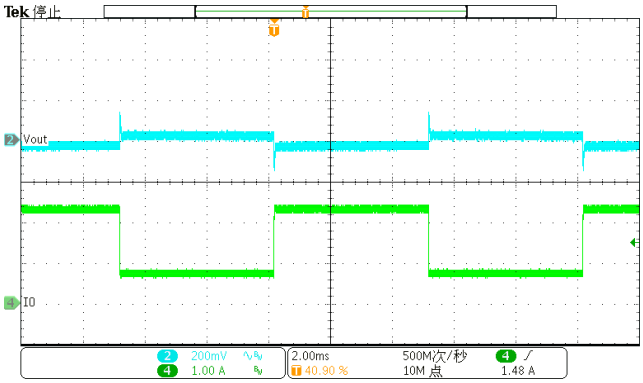
Tek 停止
Vout
IO
200mV
1.00 A
2.00ms
40.90 %
500M次/秒
10M 点
1.48 A

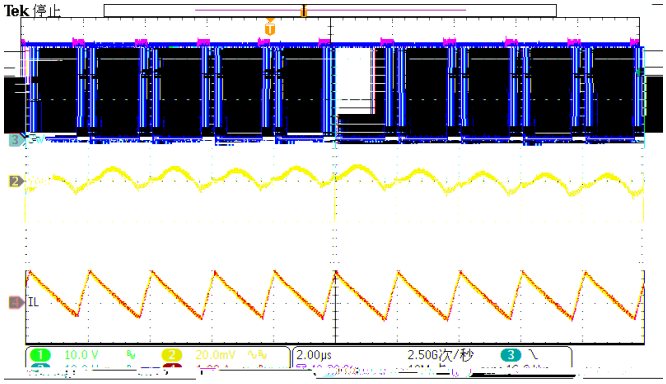
Tek 停止
IL
10.0 V
20.0mV
2.00µs
2.50G次/秒

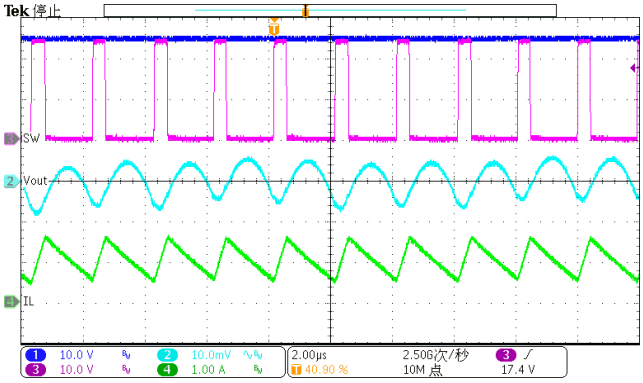
Tek 停止
SW
Vout
IL
10.0 V
10.0 V
10.0mV
1.00 A
2.00µs
40.90 %
2.50G次/秒
10M 点
17.4 V

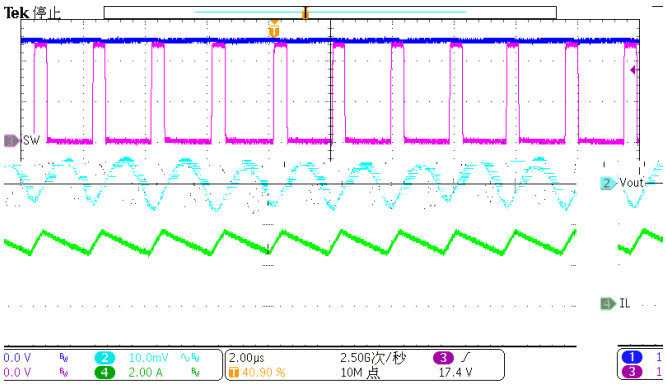
Tek 停止
SW
Vout
IL
10.0mV
2.00 A
2.00µs
40.90 %
2.50G次/秒
10M 点
17.4 V

FLUKE
72.7°C
自动 1
78.3
24.1
ε=0.95
BG=25.0
τ=100%
12/15/25
01:08:45 PM

PACKAGE INFORMATION

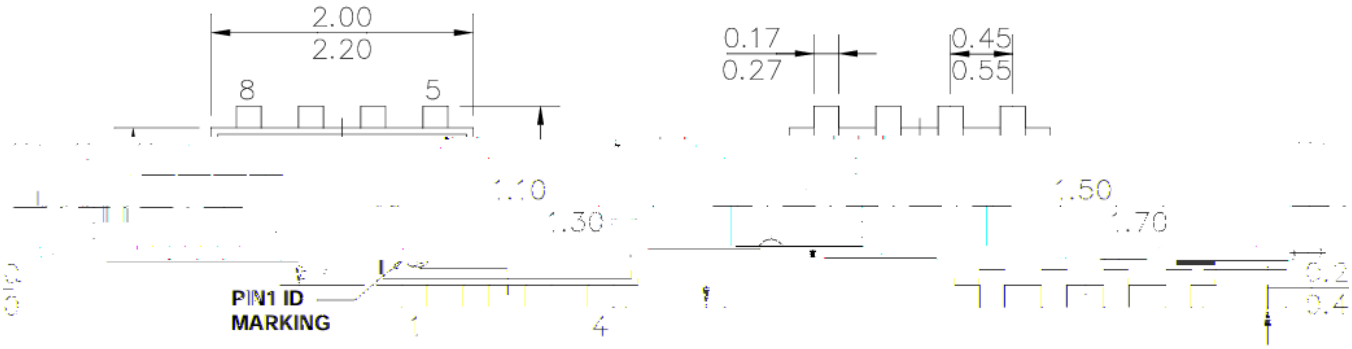

TOP VIEW **BOTTOM VIEW**

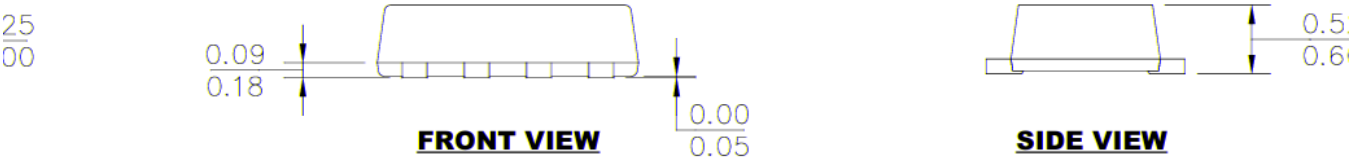

FRONT VIEW **SIDE VIEW**

NOTE:

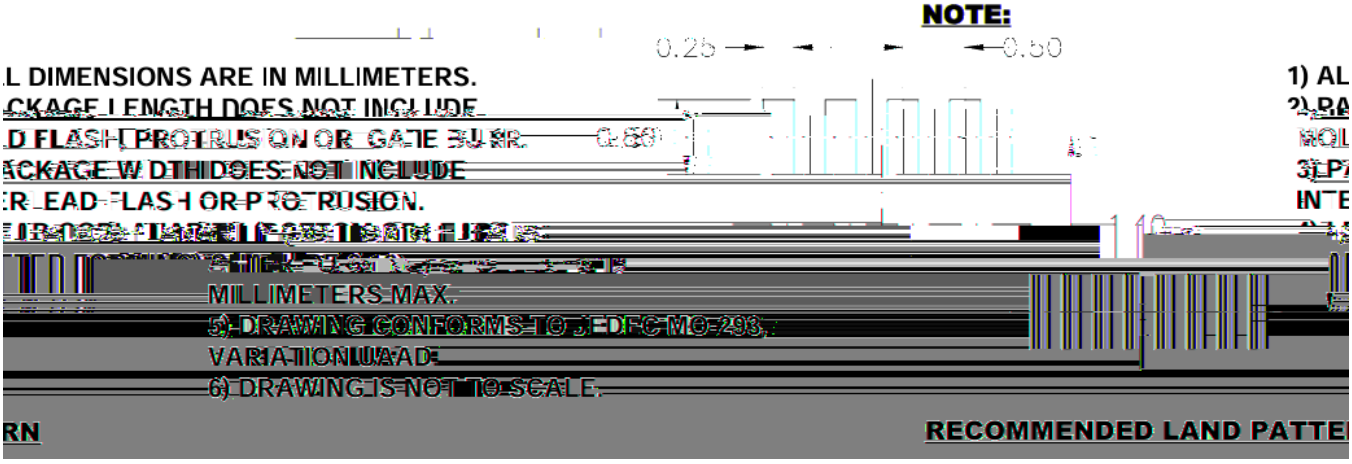
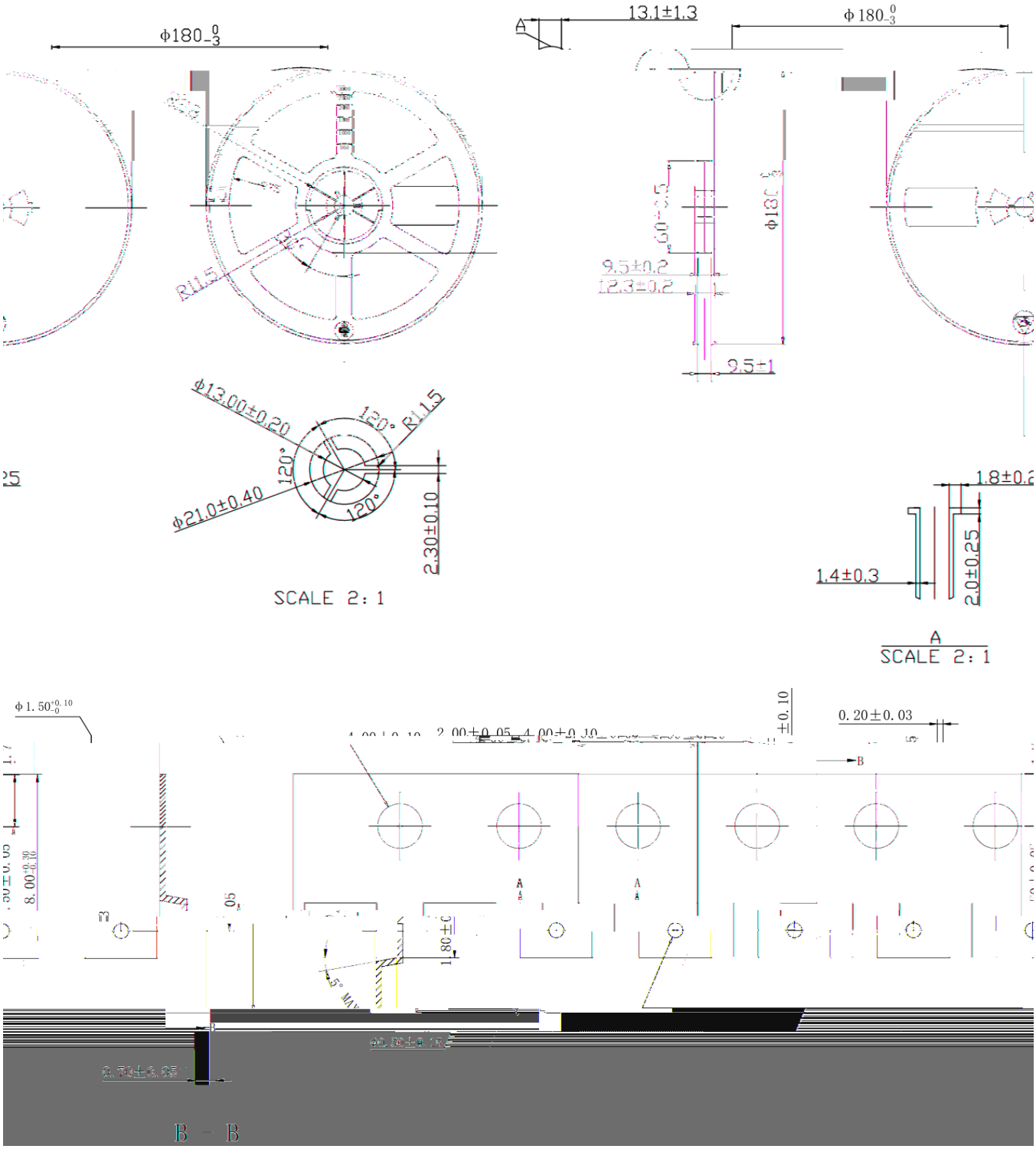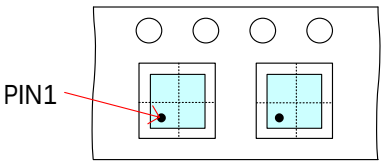
TAPE AND REEL INFORMATION