# 4.3V-60V Vin, 5A, High Efficiency Step-down DCDC Converter with Programmable Frequency

**ED ST DR**

- 
- 
- 
- 
- 
-

## DUHRHNMGHRSN X

## CDUHBDN CD HMEN L SHNM

| ORDERABLE DEVICE | PACKAGING TYPE | STANDARD PACK QTY | PACKAGE MARKING | PINS | PACKAGE DESCRIPTION | MSL |
|---|---|---|---|---|---|---|
| | | | | | | |

## ARNKTSDL HL TL SHMFR

| DESCRIPTION | MIN | MAX | UNIT |
|---|---|---|---|
| | | | |
| | | | |
| | | | |

## OHMBNMEHFT SHNM

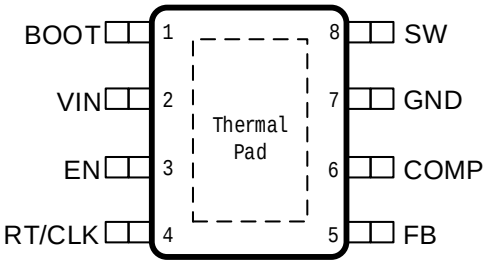


**Figure 1. 8-Lead Plastic ESOP**

| | | |
|---|---|---|
| | | |
| | | |
| | | |

## DBNL L DMCDC NOD SHMF BNMCHSHNMR

| PARAMETER | DEFINITION | MIN | MAX | UNIT |
|---|---|---|---|---|
| | | | | |
| | | | | |
| | | | | |

## DRC SHMFR

| PARAMETER | DEFINITION | MIN | MAX | UNIT |
|---|---|---|---|---|
| | | | | |
| | | | | |

(1)
(2)

## SGD L KHMEN L SHNM

| PARAMETER | THERMAL METRIC | ESOP-8L | UNIT |
|---|---|---|---|
| | | | |
| | | | |
| | | | |
| | | | |
| | | | |

## DKDBS HB K BG BS D HRS HBR

| SYMBOL | PARAMETER | TEST CONDITION | MIN | TYP | MAX | UNIT |
|---|---|---|---|---|---|---|
| **Power Supply** | | | | | | |
| | | | | | | |
| | | | | | | |
| | | | | | | |
| | | | | | | |
| **Power MOSFETs** | | | | | | |
| | | | | | | |
| **Reference and Control Loop** | | | | | | |
| | | | | | | |
| | | | | | | |
| | | | | | | |
| | | | | | | |
| | | | | | | |
| | | | | | | |
| | | | | | | |
| **Current Limit and Over Current Protection** | | | | | | |
| | | | | | | |
| | | | | | | |
| $T_{HIC_W}$ | Over current protection hiccup wait time | | | 512 | | cycles |
| $T_{HIC_R}$ | | | | | | |

| SYMBOL | PARAMETER | TEST CONDITION | MIN | TYP | MAX | UNIT |
|---|---|---|---|---|---|---|
| | | | | | | |

## SXOHB KBG BSD HRSHBR

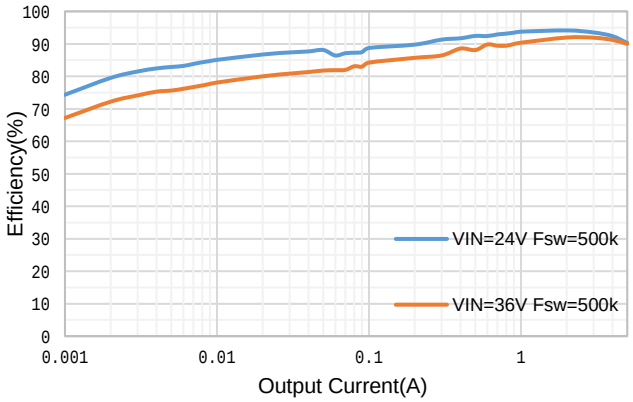


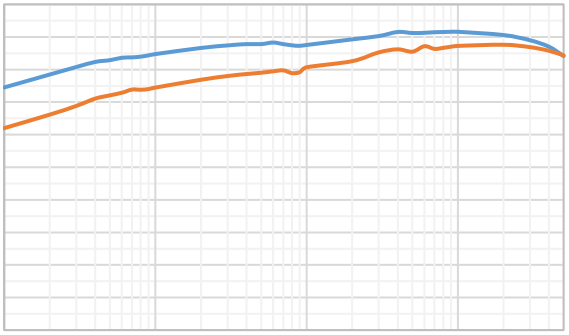

## ETMBSHNM KAKNB CHF

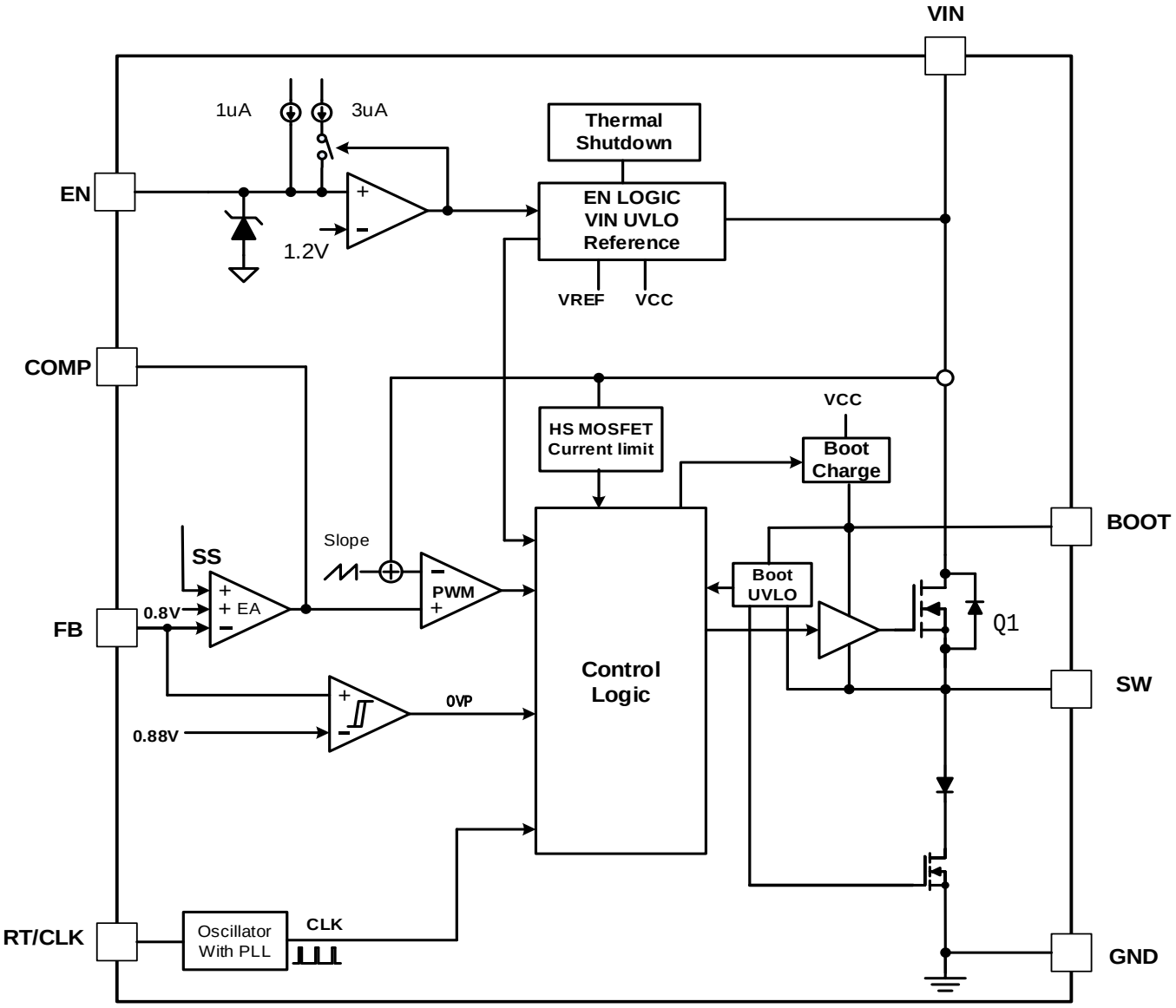

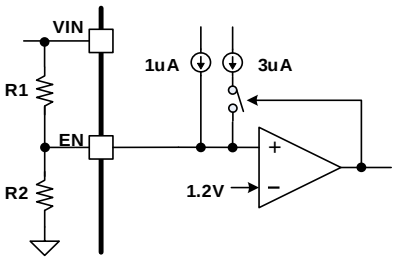


- 
- 

**Output Voltage**

- 
- 

**Internal Soft-Start**

**Switching Frequency and Clock Synchronization**

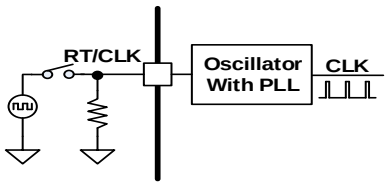

**Frequency Spread Spectrum**

**Linear Frequency Reduction**

**Bootstrap Voltage Regulator and Low Drop-out Operation**

**Over Current Limit and Hiccup Mode**

## OOKHB SHNMHMEN L SHNM

### Typical Application

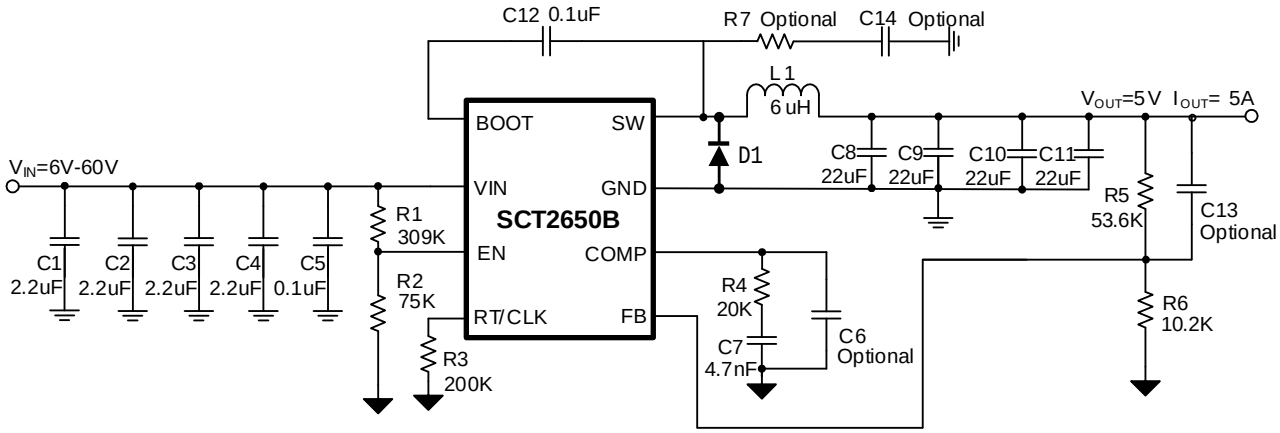


**Figure 11. SCT2650B Design Example, 5V Output with Programmable UVLO**

**Design Parameters**

| Design Parameters | Example Value |
|---|---|
| | |
| | |
| | |
| | |
| | |
| | |
| | |
| | |

**Diode Selection**

**Input Capacitor Selection**

**Bootstrap Capacitor Selection**

**Output Capacitor Selection**

•

**Table 3: Compensation Values for Typical Output Voltage/Capacitor Combinations**

| | | | | | | | |
|---|---|---|---|---|---|---|---|
| | | | | | | | |
| | | | | | | | |
| | | | | | | | |
| | | | | | | | |

**Inverting Power application**

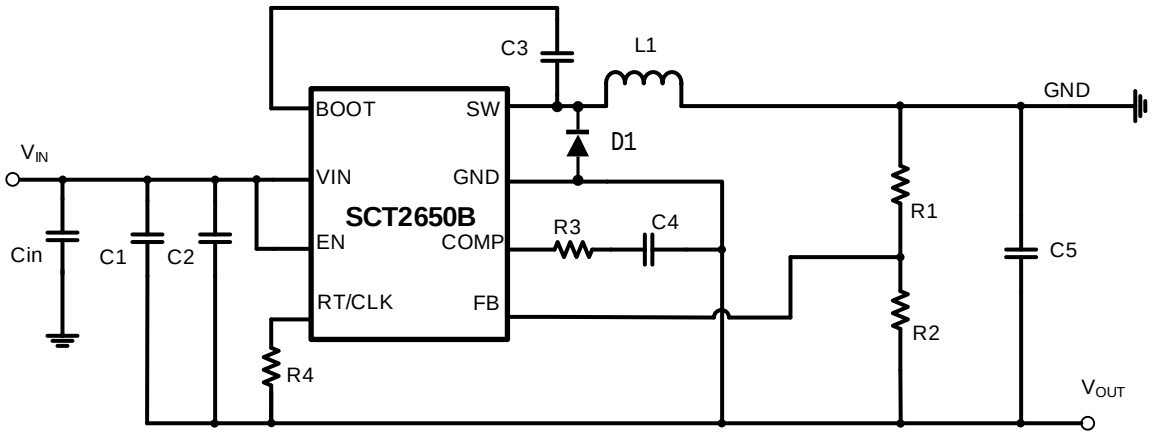

## Application Waveforms

## Application Waveforms

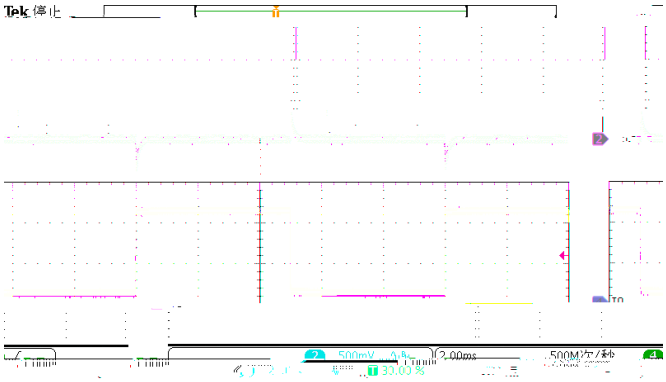


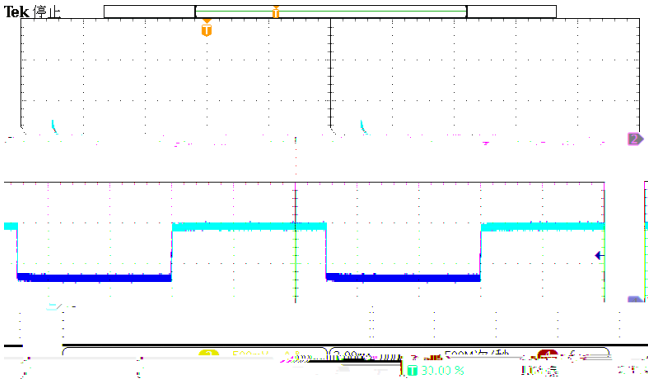


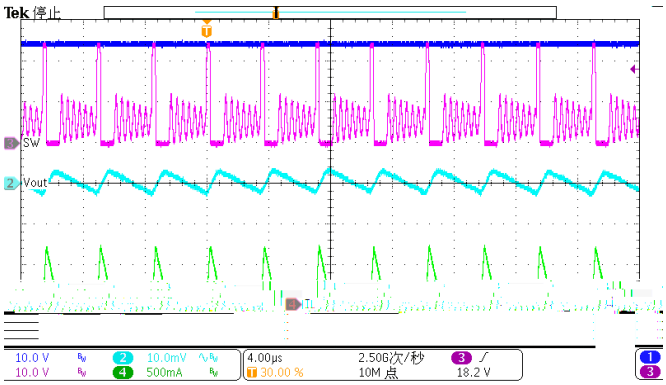


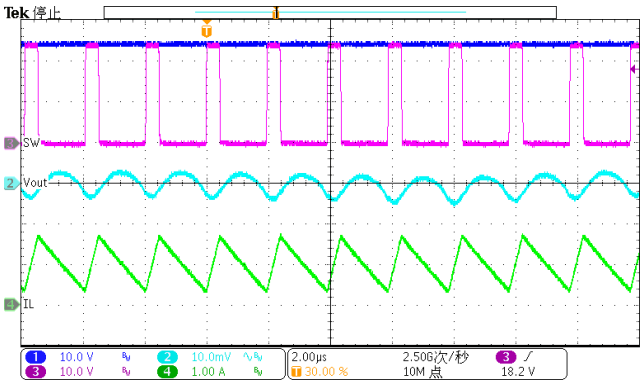


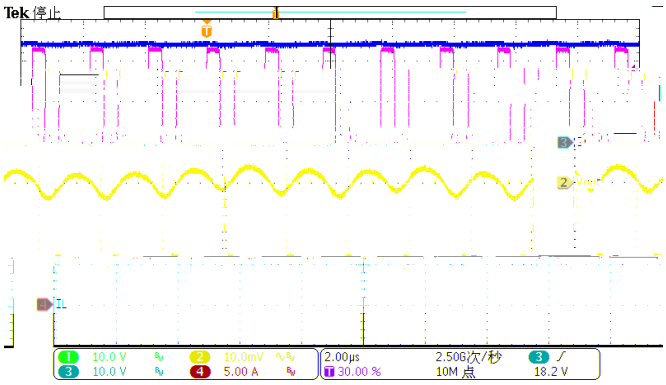


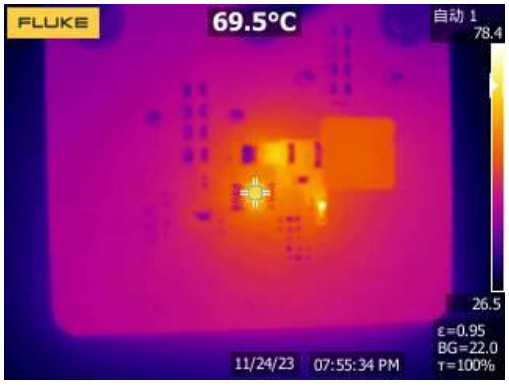

## Layout Guideline

1.

2.
3.
4.

5.

6.

7.

8.

9.
10.

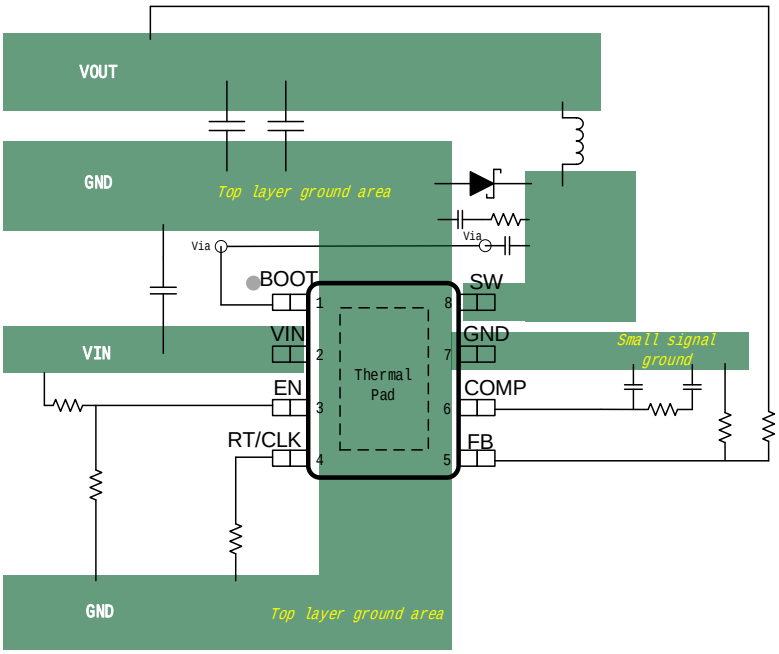

## S OD MC DDKHMEN L SHNM

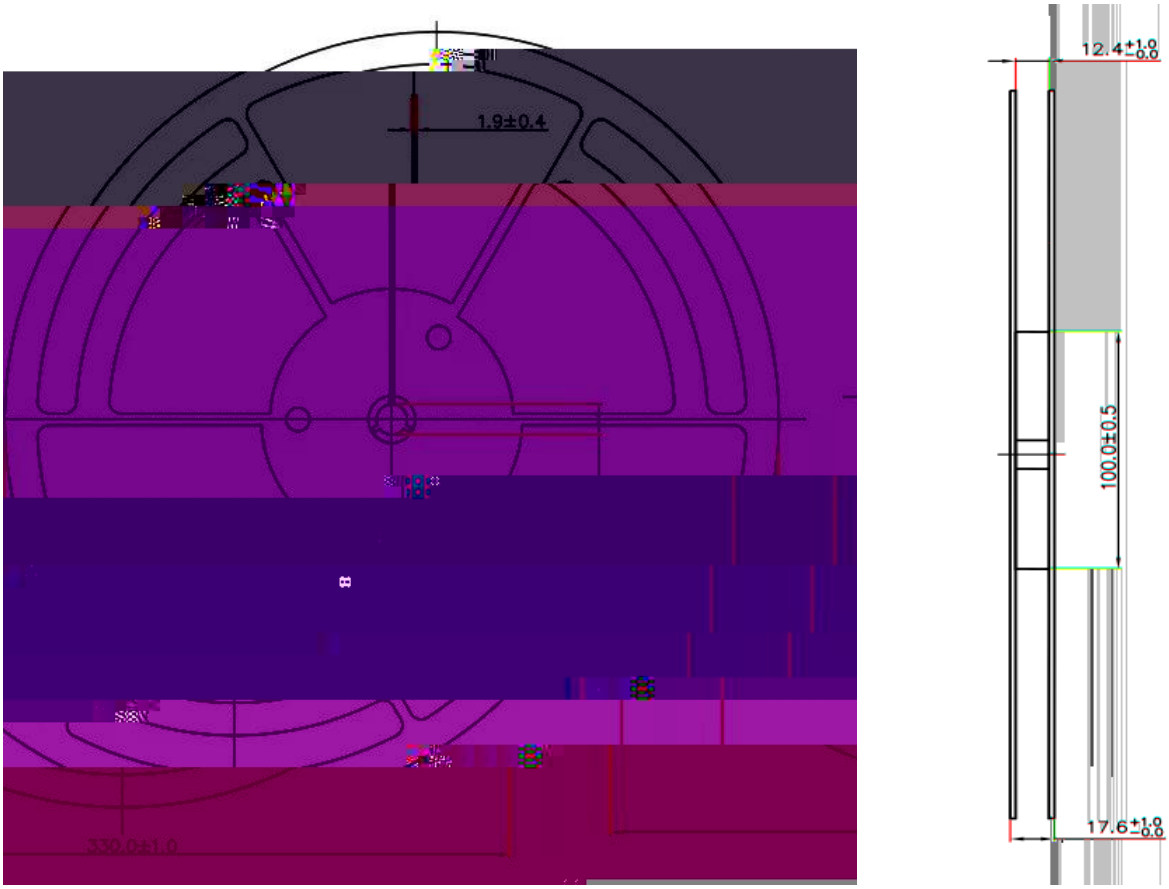


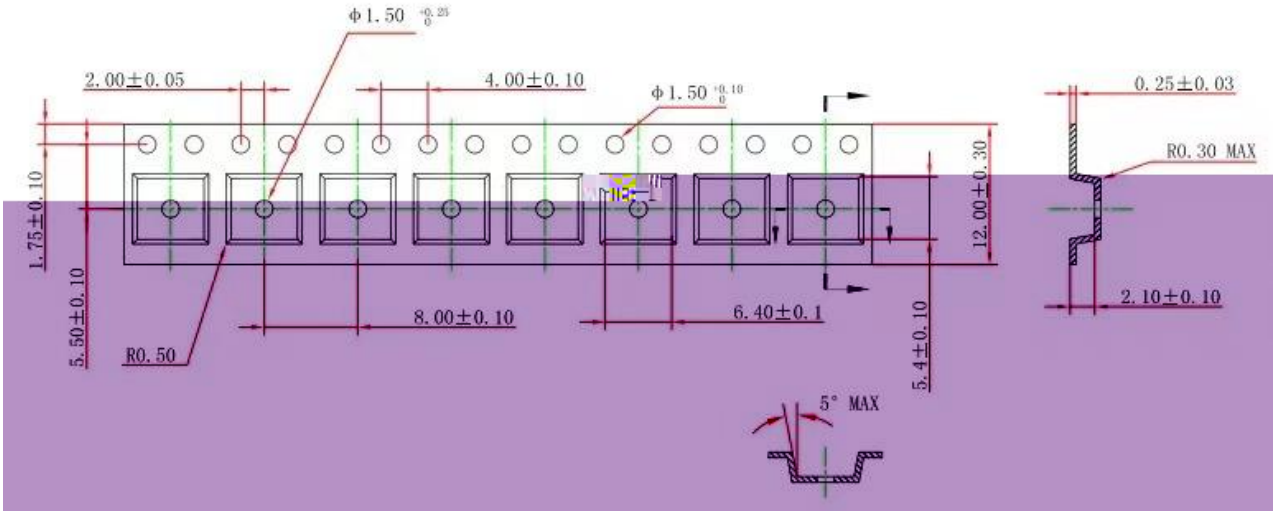


**NOTICE:**