=	8			
8				
(				
8				

=	8			

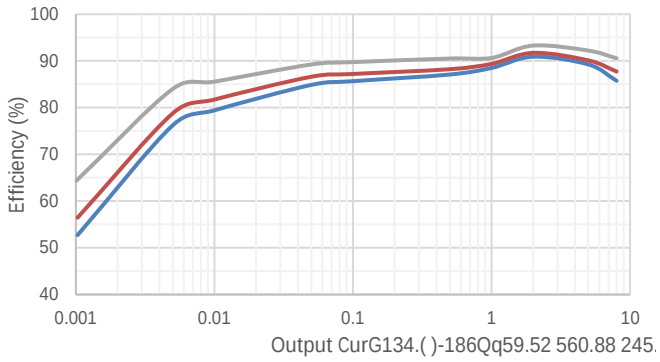
100
90
80
70
60
50
40
Efficiency (%)
0.001
0.01
0.1
1
10
Output CurG134.( )-186Qq59.52 560.88 245.

D

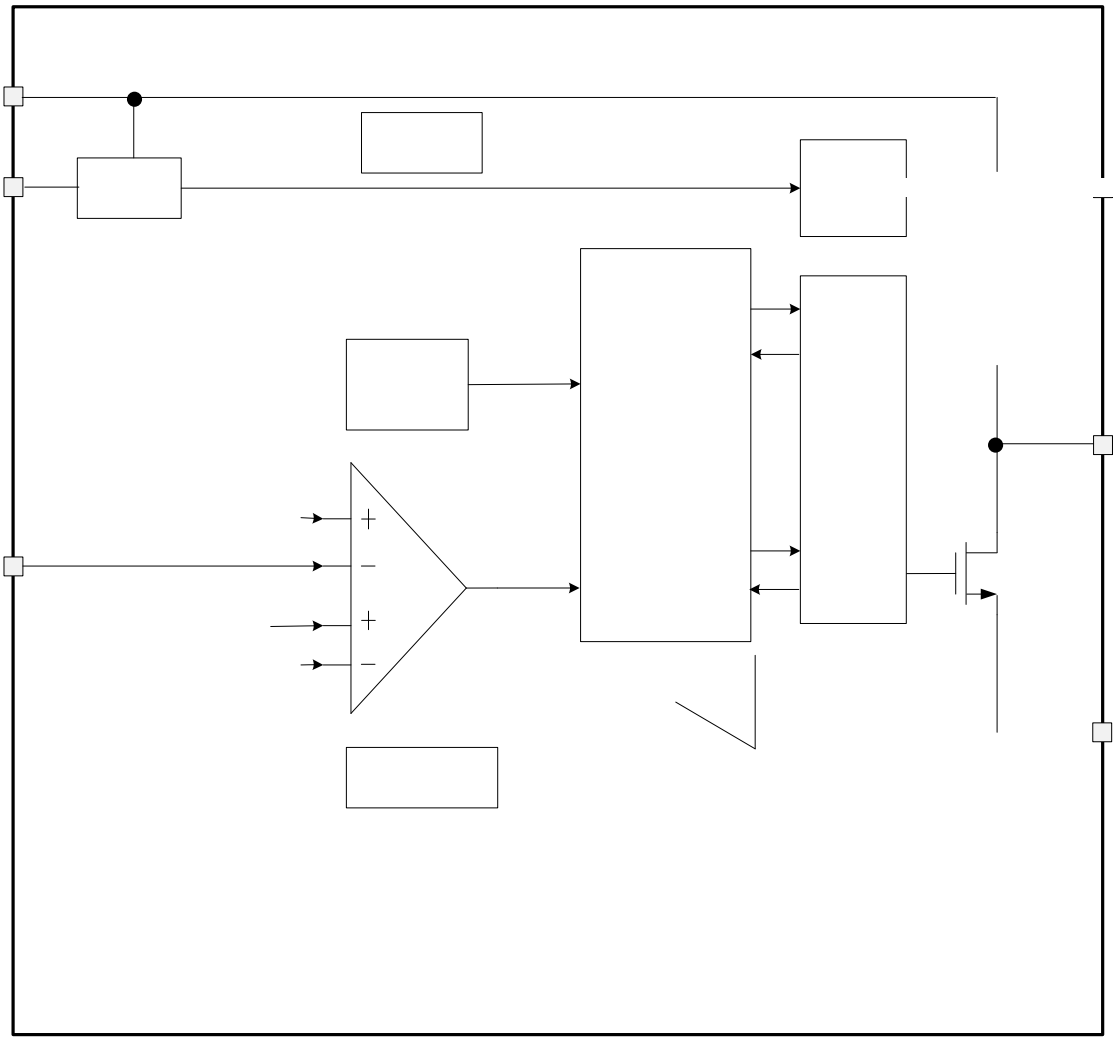

Ω

(8

8 8 8(8 8 8

T 1 1

U aa 1

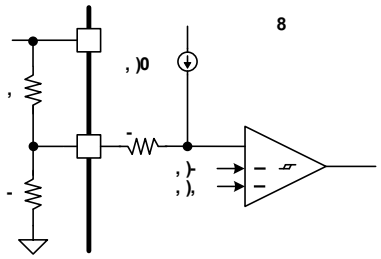

I DE $\frac{K_D \ I}{K}$ DI

8 (8

8

8 ,) 8 (8 8 8

8

8 8-) (8

8

8 .) 8 8 (8

=

8

(

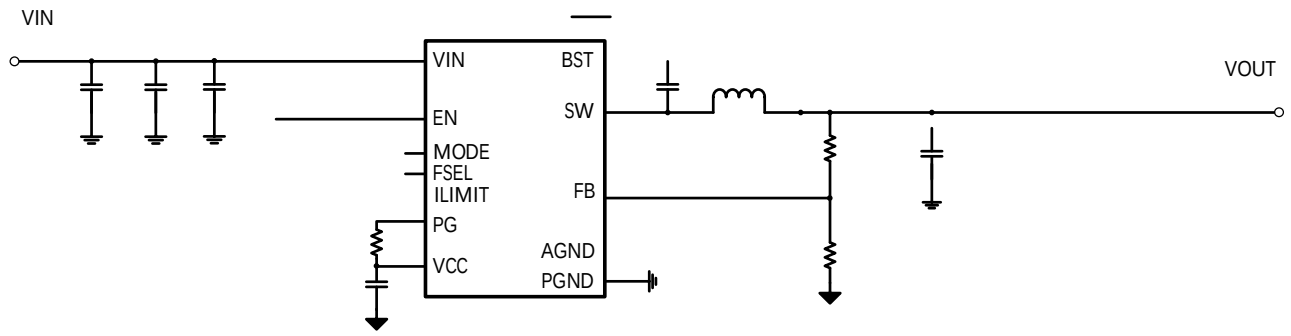

8

8 8

$$K_C \quad \frac{D \quad I}{C \quad L} \quad \frac{\mathrm{I}}{} \qquad \frac{K_{D \quad I}}{K_C}$$

8

$$C \quad B \quad C \quad \frac{K_{D \quad I} \quad K_{C\,B \quad M} \quad K_{D \quad I}}{K_{C\,B \quad M} \quad C \quad D \quad I \quad L}$$

$$AE \qquad D \quad I \qquad C \quad \frac{D \quad I}{1}$$

8

I $\frac{K_{D\ I} \quad K_C \quad K_{D\ I}}{L \qquad D\ I \quad K_C}$

I

8

$\frac{K_{D\ I} \quad K_{TU}}{K_{TU}}$

.

80

			2	3	

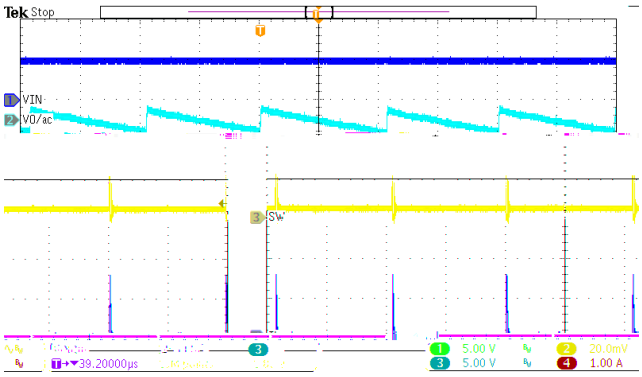
Tek Stop
VIN
VO/ac
SW
5.00 V
20.0mV
5.00 V
1.00 A
39.20000µs

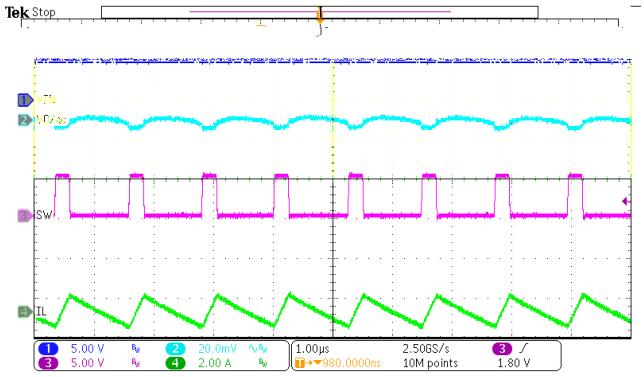
Tek Stop
VIN
VO/ac
SW
IL
5.00 V
20.0mV
5.00 V
2.00 A
1.00µs
2.50GS/s
980.0000ns
10M points
1.80 V

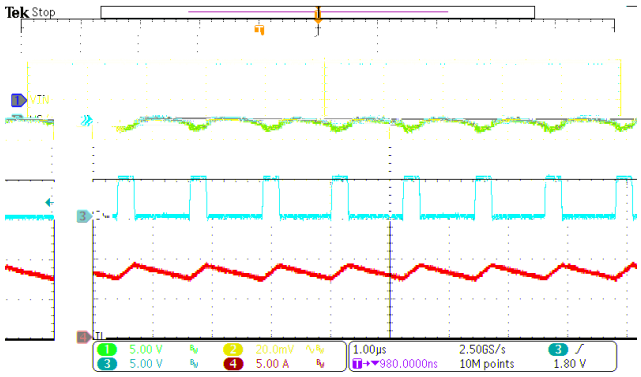
Tek Stop
VIN
IL
5.00 V
20.0mV
5.00 V
5.00 A
1.00µs
2.50GS/s
980.0000ns
10M points
1.80 V

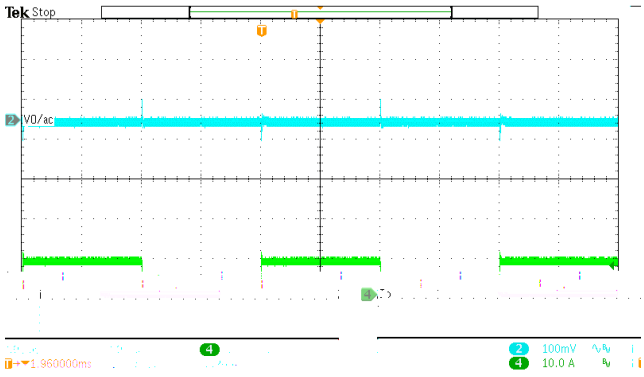
Tek Stop
VO/ac
100mV
10.0 A

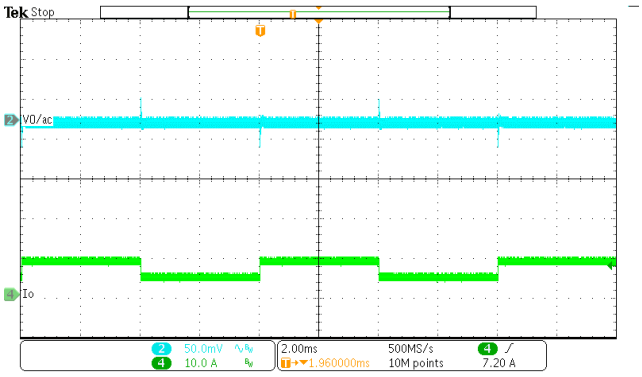
Tek Stop
VO/ac
Io
50.0mV
10.0 A
2.00ms
500MS/s
1.960000ms
10M points
7.20 A

FLUKE
61.5 °C
自动
61.
LO
最大
61.6
最小
21.7
HI
21.7
11/12/24 06:27:41 下午
E: 0.93
BG: 27°C

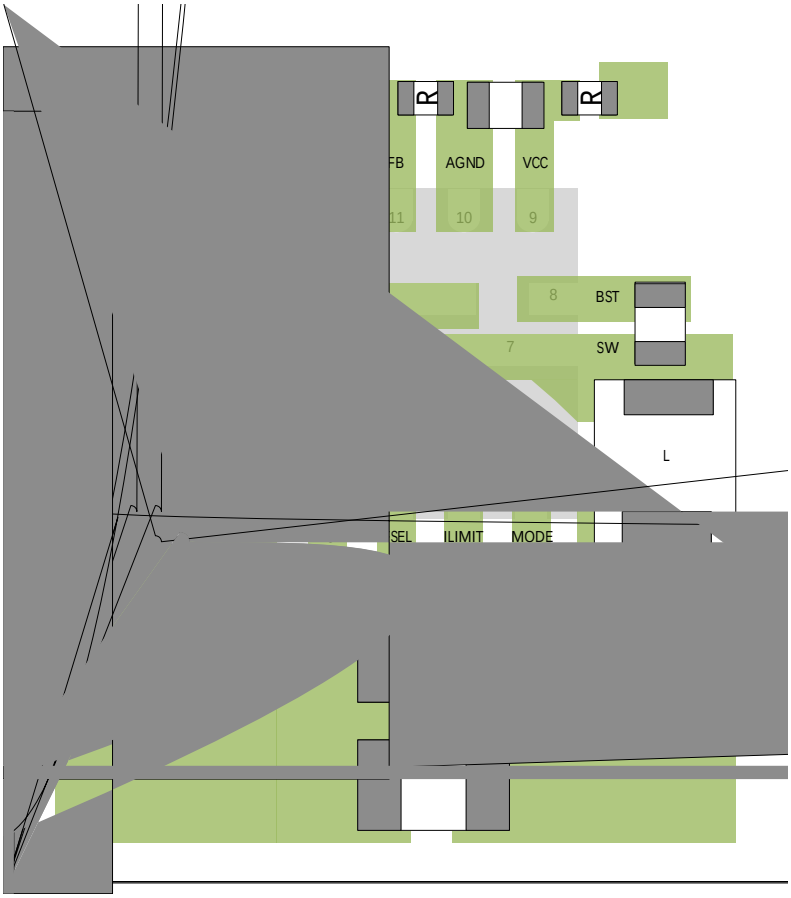
R
R
FB
AGND
VCC
11
10
9
8
BST
7
SW
L
SEL
ILIMIT
MODE

D

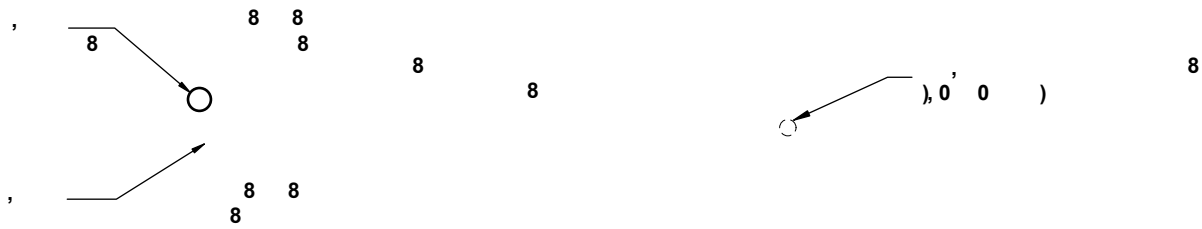

TOP VIEW **BOTTOM VIEW**

SIDE VIEW **SECTION A-A**

NOTE:

RECOMMENDED LAND PATTERN

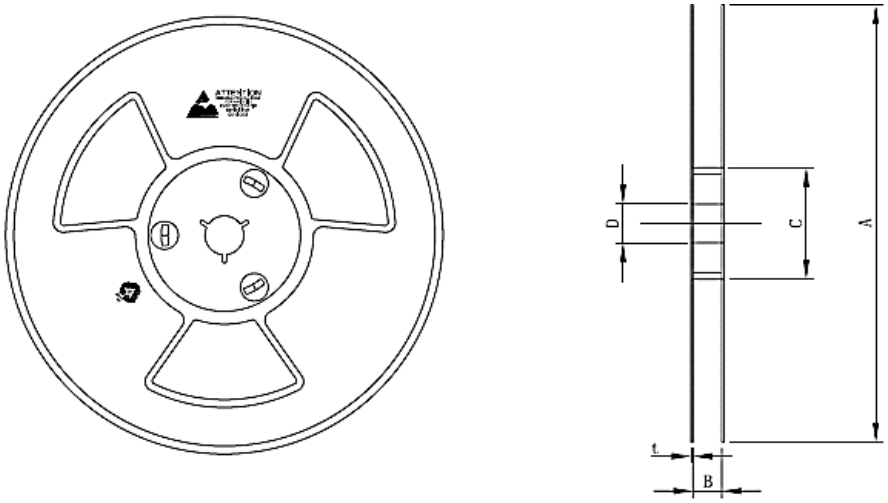

= 8	8 8 8 8		
	8		8
=			

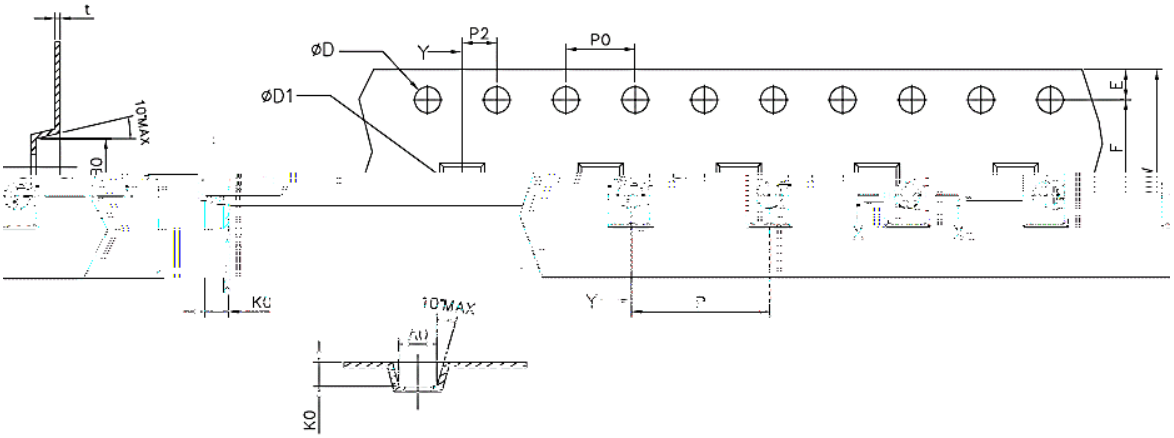

= 8	8 8 8 8		
	8		8
-			
,			
=			